WATER TREATMENT PLANT
GAC FACILITY

SRF Loan No. F26-002 & F26-002E

SRF Project NO. WX21097034

for the

CITY OF CYNTHIANA

788146

HARRISON COUNTY, KENTUCKY

FEBRUARY 2026

P.O. Box 1034
VERSAILLES, KENTUCKY 40383
KENTUCKY ENGINEERING GROUP, PLLC

COMMONWEALTH OF KENTUCKY
RYAN C. CARR
23455
LICENSED PROFESSIONAL ENGINEER

PROJECT NO. 25009

BID DOCUMENTS

P:\Projects\Cynthiana\25009 WTP GAC Facility\DWG\25009 G-0-0.dwg KEG 5/21/26

ABBREVIATIONS

A.B.	ANCHOR BOLT
ABAND	ABANDONED
ADD'L.	ADDITIONAL
ALT.	ALTERNATE/ALTERNATIVE
ALUM	ALUMINUM
APPROX	APPROXIMATE
@	AT
AUX	AUXILIARY
B./BOTT./BOT.	BOTTOM
B'FLY	BUTTERFLY
BLDG.	BUILDING
BM.	BEAM
B.O.	BOTTOM OF
B.O.S.	BOTTOM OF STEEL
BRDG.	BRIDGING
C/C	CENTER TO CENTER
C.I.P.	CAST IN PLACE
C.J.	CONTROL JOINT
CL	CENTERLINE
CLR., CL.	CLEAR
CMP	CORRUGATED METAL PIPE
CO	CLEAN OUT
COL.	COLUMN
CONC.	CONCRETE
CONSTR.	CONSTRUCTION
CONN.	CONNECTION
CONT.	CONTINUOUS
PVC	POLYVINYL CHLORIDE PIPE
CTR.	CENTER
CW	CITY WATER/PLANT WATER
D	DRAIN
DEMO	DEMOLISH
DEMO'D	DEMOLISHED
DET.	DETAIL
DIA. OR	DIAMETER
DIM.	DIMENSION
DIP	DUCTILE IRON PIPE
DN.	DOWN
DO.	DITTO
DP.	DEEP
DWG.	DRAWING
DWL.	DOWEL
EA.	EACH
E.F.	EACH FACE
E.J.	EXPANSION JOINT
ELEC.	ELECTRIC/ELECTRICAL
EL, ELEV.	ELEVATION
EMB., EMBED.	EMBEDMENT
ENG.	ENGINEER
EQ.	EQUAL/EQUIVALENT
E.W.	EACH WAY
EX, EXIST, EXTG	EXISTING
EXP.	EXPANSION
FD	FLOOR DRAIN
FE	FLOW ELEMENT
FF	FINISHED FLOOR OR FAR FACE
FG	FIBER GLASS
FIT	FLOW INSTRUMENT AND TRANSMITTER
FL, FLR	FLOOR
FLG	FLANGE
FM	FLOW METER
FTW	FILTER TO WASTE
FV	FLAP VALVE
GAL	GALLON
GALV	GALVANIZE(D)
GAS	NATURAL GAS
G.V.	GATE VALVE
G.V. & BOX	GATE VALVE AND BOX
H, HORIZ	HORIZONTAL
H.B.	HOSE BIB
HDG	HEAVY DUTY GRATING
H-O-A	HAND-OFF-AUTOMATIC
HP	HIGH POINT
HPS	HIGH PRESSURE SWITCH
I.D.	INSIDE DIAMETER
JNT.	JOINT
L.L.V.	LONG LEG VERTICAL
L.L.H.	LONG LEG HORIZONTAL
LONGIT.	LONGITUDINAL
L.P.	LOW POINT
LPS	LOW PRESSURE SWITCH
LYR.	LAYER/LAYERS
MAT'L.	MATERIAL
MAX.	MAXIMUM
MACH.	MACHINE/MACHINERY
MECH.	MECHANICAL
MFGR.	MANUFACTURER/MANUFACTURING
M.H.	MANHOLE
MID.	MIDDLE/MID POINT
MIN.	MINIMUM
MTL.	METAL
MJ	MECHANICAL JOINT
NEC.	NECESSARY
N.F.	NEAR FACE
N.I.C.	NOT IN CONTRACT
NPT	NATIONAL PIPE THREAD
NPW	NON POTABLE WATER
N.T.S.	NOT TO SCALE
O.D.	OUTSIDE DIAMETER
O.F.	OUTSIDE FACE
OPNG.	OPENING
OR EQ.	OR EQUIVALENT
O.C. OR O/C	ON CENTERS
PD	PRESSURE DRAIN
PE	PRESSURE TRANSDUCER ELEMENT
PERIM.	PERIMETER
pHE	pH TRANSDUCER ELEMENT
PIT	PRESSURE INSTRUMENT ELEMENT
P	PROPERTY LINE
PRO.	PROPOSED
PSI	POUND PER SQUARE INCH
PT.	POINT
PV	PINCH VALVE
PVC	POLYVINYL CHLORIDE
R.C.	REINFORCED CONCRETE
REINF.	REINFORCED/REINFORCEMENT
REQ'D.	REQUIRED
REQ'T.	REQUIREMENT
RPM	REVOLUTIONS PER MINUTE
SAN	SANITARY SEWER

ABBREVIATIONS CONT.

S.C.J.	SAWN CONTROL JOINT
SD	STANDARD DETAIL
SEC.	SECTION
SG	SLIDE OR SLUICE GATE
SL	SLUDGE LINE
SP.	SPACE/SPACES
SPEC.	SPECIFY/SPECIFICATIONS
SQ. OR	SQUARE
S.B.	STAINLESS STEEL
STAG.	STAGGER/STAGGERED
STIFF.	STIFFENER
STD.	STANDARD
STS	STORM SEWER
SWD	SIDE WATER DEPTH
THRU	THROUGH
TYP.	TYPICAL/TYPICALLY
UG	UNDERGROUND ELECTRIC POWER
U.O.N.	UNLESS OTHERWISE NOTED
U.V.	ULTRAVIOLET
V, VERT	VERTICAL
VE	VELOCITY ELEMENT
VIT	VELOCITY INSTRUMENT AND TRANSMITTER
W/	WITH
W/O	WITHOUT
W.C.	WATER COLUMN
W.S.E.	WATER SURFACE ELEVATION

LEGEND

- WATER LINE
- GAS LINE
- ELECTRIC LINE
- CATV LINE
- SANITARY LINE
- STORM LINE
- FENCE LINE
- PROPERTY LINE

GENERAL NOTES

1. THE CONTRACTOR SHALL FIELD LOCATE EXISTING STRUCTURES AND PIPING AND NOTIFY THE ENGINEER OF ANY DISCREPANCIES ENCOUNTERED BEFORE BEGINNING CONSTRUCTION OPERATIONS. SITE (YARD) PIPING LAYOUT OR DIMENSIONS, WHERE GIVEN, ARE TO SHOW THE ENGINEER'S INTENT AND TO AID THE CONTRACTOR IN PIPE INSTALLATION.
2. GENERALLY, THE LIMITS OF CONSTRUCTION SHALL BE AS NOTED. A WRITTEN REQUEST FOR ANY ADDITIONAL EASEMENTS OR ACCESS SHALL BE SUBMITTED BY THE CONTRACTOR TO THE OWNER PRIOR TO ANY CONSTRUCTION OPERATIONS.
3. DIMENSIONS OF EXISTING STRUCTURES AND/OR SITE RESTRICTIONS ARE APPROXIMATE. ALL NECESSARY DIMENSIONS AND ELEVATIONS OF EXISTING STRUCTURES & TOPOGRAPHY SHALL BE VERIFIED BY THE CONTRACTOR IN THE FIELD PRIOR TO BEGINNING CONSTRUCTION OPERATIONS.
4. GENERALLY, ALL EXISTING EQUIPMENT, PIPING VALVING, ETC., SHOWN TO BE REMOVED, SHALL, AFTER REMOVAL, BE DISPOSED OF BY THE CONTRACTOR UNLESS SHOWN OTHERWISE ON THESE DRAWINGS. CONTRACTOR SHALL CONSULT PLANT REPRESENTATIVE BEFORE DISPOSAL OF ANY ITEMS.
5. ALL WALL PENETRATIONS FOR PIPING SHALL CONFORM TO THE STANDARD DETAILS AS REQUIRED BY THE CONTRACT DRAWINGS AND SPECIFICATIONS UNLESS OTHERWISE NOTED.
6. ALL BURIED PIPES SHALL HAVE A MINIMUM OF 3'-6" OF COVER AS MEASURED VERTICALLY FROM FINISHED GRADE TO THE TOP OF PIPE, UNLESS OTHERWISE NOTED.
7. IT SHALL BE THE CONTRACTOR'S RESPONSIBILITY TO WORK ALL APPLICABLE DRAWINGS AND THE APPROPRIATE SPECIFICATIONS AS A UNIT. ANY OMISSIONS, DELETIONS, OR CONFLICTS ARISING AS A RESULT OF FAILURE TO INCORPORATE ALL DRAWINGS AND SPECIFICATIONS THAT APPLY SHALL BE CORRECTED BY THE CONTRACTOR AT NO ADDED COST TO THE OWNER.
8. PIPE AND CONDUIT SUPPORTS ARE TYPICALLY NOT SHOWN. HOWEVER ALL PIPING, INSIDE AND OUTSIDE, SHALL BE ADEQUATELY SUPPORTED AND BLOCKED SO AS NOT TO PRODUCE UNDUE STRAIN OR VIBRATION ON PIPE JOINTS OR EQUIPMENT, SEE SPECIFICATIONS.
9. ALL PIPING ABANDONED IN PLACE SHALL BE PROPERLY CAPPED OR PLUGGED AT EACH END AND RENDERED LEAKPROOF.
10. EXACT LOCATIONS OF DUCTS, CONDUITS, LIGHT FIXTURES AND PIPES SHALL BE FIELD LOCATED AND COORDINATED WITH THE WORK OF SUBCONTRACTORS FOR THE VARIOUS TRADES INVOLVED.
11. ELECTRICAL AND INSTRUMENTATION SUBCONTRACTORS SHALL NOTIFY THE CONTRACTOR AND COORDINATE THE SIZES AND LOCATIONS OF ALL OPENINGS AND RECESSES IN STRUCTURES REQUIRED FOR THEIR WORK.
12. ALL EXISTING PAVING DISTURBED DURING CONSTRUCTION SHALL BE RENOVATED IN ACCORDANCE WITH STANDARD DETAILS.
13. CONTRACTOR SHALL FIELD LOCATE AND EXPOSE UTILITIES BEFORE INSTALLING PIPE OR CONDUITS.
14. CONTRACTOR IS RESPONSIBLE FOR ALL DEWATERING, SHEET AND SHORING, REQUIRED FOR EXCAVATION AND SHALL SUBMIT PLANS STAMPED BY A LICENSED KY PROFESSIONAL ENGINEER PRIOR TO ANY EXCAVATION.
15. ALL NON-POTABLE WATER OUTLETS WHERE READILY ACCESSIBLE TO PLANT EMPLOYEES USE SHALL BEAR THE FOLLOWING SIGN: "NON-POTABLE WATER - DO NOT DRINK"
16. THE CONTRACTOR SHALL SCHEDULE ALL WORK TO ALLOW PLANT OPERATION TO BE MAINTAINED THROUGHOUT CONSTRUCTION CONTRACT TIME PERIOD.
17. EXTREME CARE SHALL BE TAKEN TO PROTECT UNDERGROUND PIPING AND UNDER SLAB PIPING FROM SURFACE LOADS EXERTED BY CONSTRUCTION EQUIPMENT (TRUCKS, LOADERS, CRANES, ETC.).
18. THE RENOVATION WILL BE ACCOMPLISHED IN PHASES, THEREFORE THE CONTRACTOR SHALL TAKE PRECAUTIONS TO PROTECT COMPLETED WORK FROM ONGOING RENOVATION WORK.
19. THE CONTRACTOR SHALL CONFIRM THE CONTENTS OF ANY AND ALL PIPING INVOLVED IN DEMOLITION REQUIREMENTS AND PROVIDE AND WEAR SUITABLE PROTECTIVE CLOTHING, GLOVES AND EYE PROTECTION.

LOCATION MAP

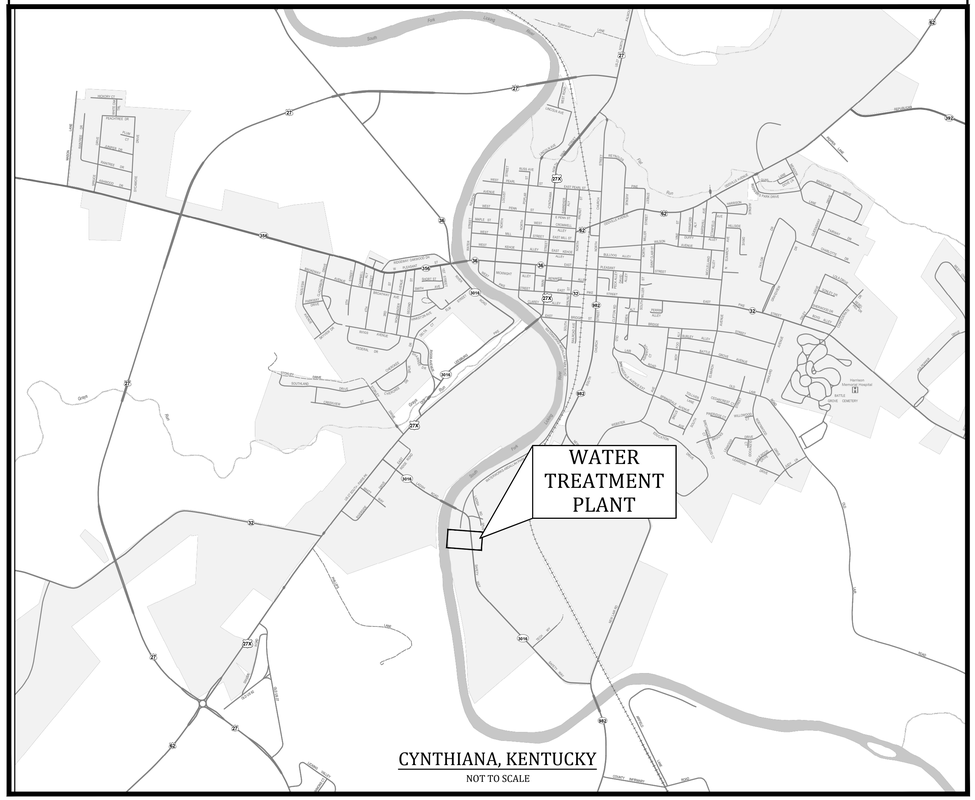

CYNTHIANA, KENTUCKY
NOT TO SCALE

SYMBOLS

- WATER SURFACE ELEVATION
- DIRECTION OF FLOW
- PP — POWER POLE
- UP — UTILITY POLE
- LP — LIGHT POLE
- FH — FIRE HYDRANT
- YH — YARD HYDRANT
- XXX — EXISTING CONTOUR ELEVATION

UTILITIES

BUD - Before You Dig
1-800-752-6007
or DIAL 811

NOTE:

IN ACCORDANCE WITH KENTUCKY STATE LAW, ANY ACTIVITY THAT RESULTS IN MOVEMENT, PLACEMENT, BORING, PROBING OR DIGGING IN OR ON THE GROUND SHALL CONTACT THE ONE CALL CENTER FOR UNDERGROUND UTILITY LOCATIONS.

INDEX OF DRAWINGS

SHT. NO.	DESCRIPTION:
-	COVER
G-0-1	ABBREVIATIONS, LEGEND, SYMBOLS, GENERAL NOTES, UTILITIES, LOCATION MAP, & INDEX OF DRAWINGS
C-0-1	SITE IDENTIFICATION PLAN
C-0-2	SITE GRADING PLAN
C-0-3	SITE PIPING PLAN
C-1-1	GAC BUILDING PLAN
C-1-2	GAC BUILDING SECTIONS
C-1-3	GAC PUMP STATION SECTIONS
C-1-4	GAC PUMP STATION SECTIONS
C-1-5	GAC SYSTEM DETAILS
C-1-6	GAC SYSTEM SCHEMATIC
SD-1	STANDARD DETAILS
SD-2	STANDARD DETAILS
SD-3	EROSION CONTROL DETAILS
A-1-01	GAC FACILITY BUILDING - FLOOR PLAN
A-1-02	GAC FACILITY BUILDING - BUILDING ELEVATIONS
A-1-03.1	GAC FACILITY BUILDING - BUILDING SECTION
A-1-03.2	GAC FACILITY BUILDING - BUILDING SECTION
A-1-03.3	GAC FACILITY BUILDING - BUILDING SECTION
A-1-03.4	GAC FACILITY BUILDING - BUILDING SECTION
A-1-04	GAC FACILITY BUILDING - DOOR SCHEDULE & DETAILS
S-1-1	GENERAL NOTES
S-1-2	GENERAL NOTES
S-1-3	STRUCTURAL SPECIAL INSPECTIONS
S-1-4	STRUCTURAL SPECIAL INSPECTIONS
S-1-5	STRUCTURAL SPECIAL INSPECTIONS
S-2-1	FOUNDATION PLAN
S-2-2	TANK FOUNDATION PLAN
S-3-1	TYPICAL FOUNDATION DETAILS
S-3-2	TYPICAL FOUNDATION DETAILS
S-3-3	TYPICAL FOUNDATION DETAILS
S-3-4	FOUNDATION SECTIONS
S-4-1	TYPICAL FRAMING DETAILS

SHT. NO.	DESCRIPTION:
H-1	HVAC SYMBOLS, ABBREVIATIONS, & SCHEDULES
H-2	GAC BUILDING HVAC PLAN
E-1	ELECTRICAL SYMBOLS, ABBREVIATIONS, & SCHEDULES
E-2	ELECTRICAL DETAILS
E-3	ELECTRICAL DETAILS CONTINUED
E-4	ELECTRICAL SITE PLAN
E-5	ELECTRICAL CONTROL CIRCUITS AND ONE-LINE DIAGRAM
E-6	GAC BUILDING LIGHTING PLAN
E-7	GAC BUILDING POWER PLAN
I-1	INSTRUMENTATION SYMBOLS, ABBREVIATIONS, SCHEDULES & DETAILS
I-2	SCADA NETWORK ARCHITECTURE DIAGRAM
I-3	SCADA PANEL DCC-GAC DIAGRAMS
I-4	SCADA I-O TABLE

P:\Projects\Cynthiana\25009 WTP GAC Facility\DWG\25009 G-0-1.dwg KEG 5/21/26

IT IS A VIOLATION OF LAW FOR ANY PERSON TO ALTER THIS DRAWING WITHOUT WRITTEN PERMISSION FROM KENTUCKY ENGINEERING GROUP, PLLC AND ACTING UNDER THE DIRECTION OF A LICENSED ENGINEER.

THIS DRAWING WAS PREPARED AT THE SCALE INDICATED. INACCURACIES IN THE STATED SCALE MAY BE INTRODUCED WHEN DRAWINGS ARE REPRODUCED BY ANY MEANS. USE THE GRAPHIC SCALE BAR IN THE DRAWING OR TITLE BLOCK TO DETERMINE THE ACTUAL SCALE.

NO.	DATE	REVISIONS	BY

DATE:	FEBRUARY 2026
PROJECT MGR:	RCC
DRAWN BY:	JAB
CHECKED BY:	RCC
SCALE:	AS NOTED

2026 © Kentucky Engineering Group, PLLC

P.O. Box 1034
VERSAILLES, KENTUCKY 40383
KENTUCKY ENGINEERING GROUP, PLLC

WATER TREATMENT PLANT
GAC FACILITY
FOR THE
CITY OF CYNTHIANA

ABBREVIATIONS, GENERAL NOTES, LEGEND, SYMBOLS, LOCATION MAP, & INDEX OF DRAWINGS

PROJECT NO.
25009

SHEET NO.
G-0-1

BID DOCUMENTS

REFERENCE NOTES:

1. 30'-0" CANTILEVER GATE W/ AUTOMATIC CONTROL , MOTOR OPERATED, INSTALLED ON 20'-0" OPENING. SEE DETAIL, SHEET SD-2.
2. BOLLARD, SEE DETAIL, SHEET SD-1
3. NEW SECURITY FENCE, SEE DETAIL, SHEET SD-2
4. GENERATOR ALTERNATE, SEE SHEET E-4

GENERAL NOTES:

1. CONTRACTOR SHALL COORDINATE THE FINAL LOCATION OF NEW CANTILEVER GATE WITH THE OWNER / ENGINEER.

LEGEND:

BITUMINOUS PAVEMENT, SEE DETAIL, SHEET SD-1

CONCRETE PAVEMENT, SEE DETAIL, SHEET SD-1

SURVEY CONTROL/STRUCTURE CORNERS

Point	Northing	Easting	Elevation	Description
1	4027883.609	5336951.758	714.34	BM 1 END OF RETAINING WALL
2	4027875.870	5335960.735	0.00	GAC CORNER
3	4027865.471	5335843.862	0.00	GAC CORNER
4	4027943.498	5335836.920	0.00	GAC CORNER
5	4027953.897	5335953.793	0.00	GAC CORNER

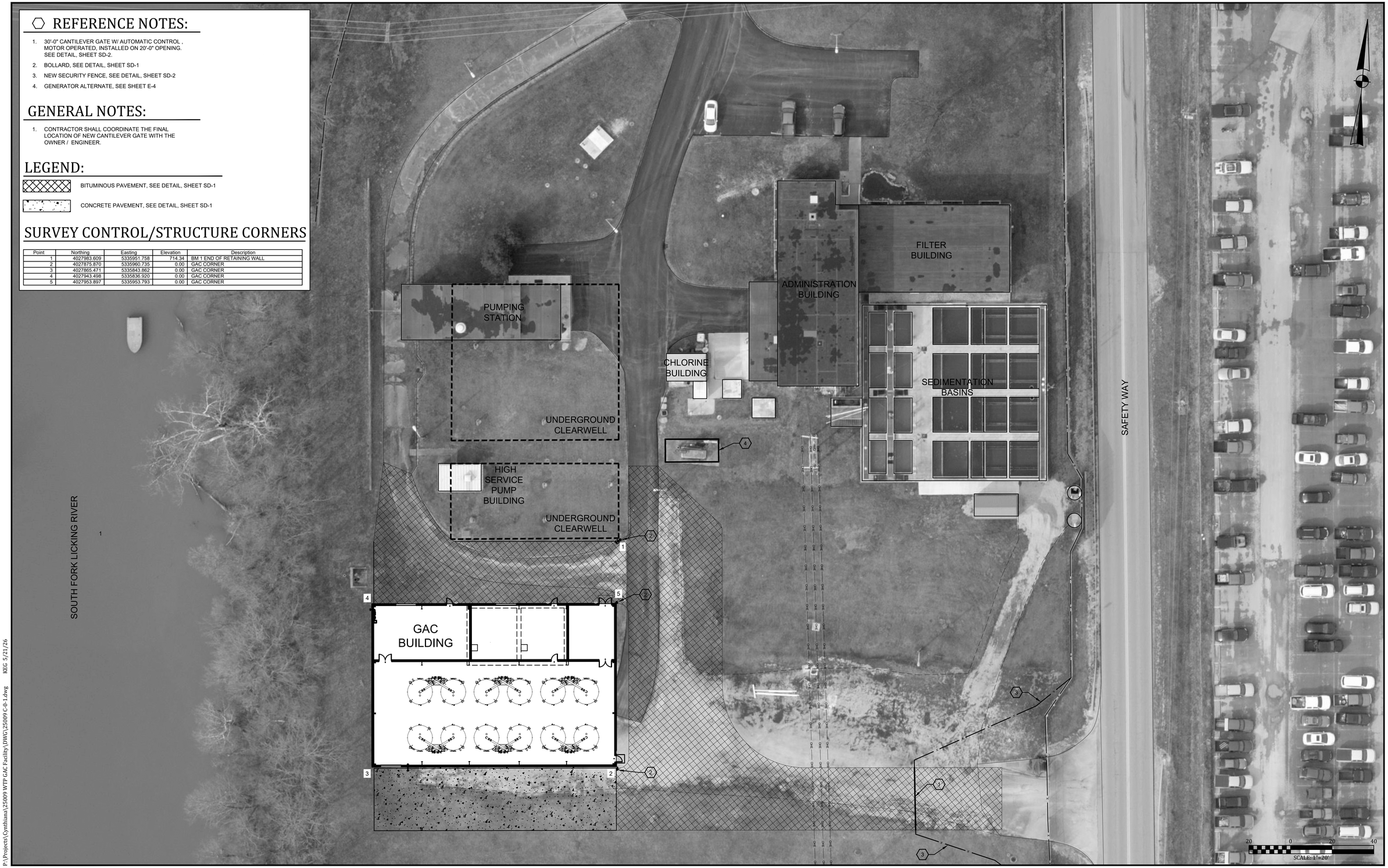

P:\Projects\Cynthiana\25009 WTP GAC Facility\DWG\25009 C-0-1.dwg KEG 5/21/26

IT IS A VIOLATION OF LAW FOR ANY PERSON TO ALTER THIS DRAWING WITHOUT WRITTEN PERMISSION FROM KENTUCKY ENGINEERING GROUP, PLLC AND ACTING UNDER THE DIRECTION OF A LICENSED ENGINEER.

THIS DRAWING WAS PREPARED AT THE SCALE INDICATED. INACCURACIES IN THE STATED SCALE MAY BE INTRODUCED WHEN DRAWINGS ARE REPRODUCED BY ANY MEANS. USE THE GRAPHIC SCALE BAR IN THE DRAWING OR TITLE BLOCK TO DETERMINE THE ACTUAL SCALE.

NO.	DATE	REVISIONS	BY

DATE:	FEBRUARY 2026
PROJECT MGR:	RCC
DRAWN BY:	JAB
CHECKED BY:	RCC
SCALE:	AS NOTED

2026 © Kentucky Engineering Group, PLLC

P.O. Box 1034
VERSAILLES, KENTUCKY 40383
KENTUCKY ENGINEERING GROUP, PLLC

WATER TREATMENT PLANT
GAC FACILITY
FOR THE
CITY OF CYNTHIANA

SITE IDENTIFICATION PLAN

PROJECT NO. 25009

SHEET NO. C-0-1

BID DOCUMENTS



LEGEND:

- 650 EXISTING CONTOUR
- 650 PROPOSED CONTOUR
- SF SILT FENCE
- BITUMINOUS PAVEMENT, SEE DETAIL SHEET SD-1
- CONCRETE PAVEMENT, SEE DETAIL SHEET SD-1

REFERENCE NOTES:

1. INSTALL SILT FENCE AND SILT CHECK AS REQUIRED PER DETAILS. (TYP.)

GENERAL NOTES:

1. CONTRACTOR TO REFER TO SHEET SD-3 FOR EROSION CONTROL TO BE INSTALLED PRIOR TO LAND DISTURBING ACTIVITIES.
2. SITE PREPARATION WILL REQUIRE REMOVAL OF ALL VEGETATION, SURFACE ORGANIC SOILS, AND ANY OTHER SURFACE DELETERIOUS MATERIALS.
3. THE CONTRACTOR IS TO VERIFY THE EXACT LOCATION OF ALL EXISTING UTILITIES AND BENCHMARKS. TAKE CARE TO PROTECT UTILITIES THAT ARE TO REMAIN. REPAIR ANY DAMAGE ACCORDING TO LOCAL STANDARDS AND, AT THE CONTRACTOR'S EXPENSE, COORDINATE ALL CONSTRUCTION WITH THE APPROPRIATE UTILITY COMPANY.
4. PROPOSED CONTOUR LINES AND SPOT ELEVATIONS ARE THE RESULT OF AN ENGINEERED GRADING DESIGN AND REFLECT A PLANNED INTENT WITH REGARD TO DRAINAGE AND MOVEMENT OF MATERIALS. SHOULD THE CONTRACTOR HAVE ANY QUESTIONS OF THE INTENT OR ANY PROBLEM WITH THE CONTINUITY OF GRADES, THE ENGINEER SHALL BE CONTACTED IMMEDIATELY.
5. THE CONTRACTOR SHALL CALL KENTUCKY ONE CALL (1-800-752-6007) 72 HOURS PRIOR TO PROCEEDING WITH ANY EXCAVATION.
6. POSITIVE DRAINAGE SHALL BE ESTABLISHED AS THE FIRST ORDER OF WORK AND SHALL BE MAINTAINED AT ALL TIMES DURING AND AFTER CONSTRUCTION. SOIL SOFTENED BY PERCHED WATER IN FOUNDATION AND PAVEMENT AREAS MUST BE UNDERCUT AND REPLACED WITH SUITABLE FILL MATERIALS APPROVED BY THE GEOTECHNICAL ENGINEER. GROUNDWATER INFILTRATION INTO EXCAVATIONS SHOULD BE EXPECTED AND THE WATER SHALL BE REMOVED USING GRAVITY DRAINAGE OR PUMPING AT THE CONTRACTOR'S EXPENSE.
7. CONTRACTOR SHALL PROVIDE POSITIVE DRAINAGE AWAY FROM ALL NEW AND EXISTING STRUCTURES.

P:\Projects\Cynthiana\25009 WTP GAC Facility\DWG\25009 C-0-2.dwg KEG 5/21/26

IT IS A VIOLATION OF LAW FOR ANY PERSON TO ALTER THIS DRAWING WITHOUT WRITTEN PERMISSION FROM KENTUCKY ENGINEERING GROUP, PLLC AND ACTING UNDER THE DIRECTION OF A LICENSED ENGINEER.

THIS DRAWING WAS PREPARED AT THE SCALE INDICATED. INACCURACIES IN THE STATED SCALE MAY BE INTRODUCED WHEN DRAWINGS ARE REPRODUCED BY ANY MEANS. USE THE GRAPHIC SCALE BAR IN THE DRAWING OR TITLE BLOCK TO DETERMINE THE ACTUAL SCALE.

NO.	DATE	REVISIONS	BY

DATE:	FEBRUARY 2026
PROJECT MGR:	RCC
DRAWN BY:	JAB
CHECKED BY:	RCC
SCALE:	AS NOTED

2026 © Kentucky Engineering Group, PLLC

P.O. Box 1034
VERSAILLES, KENTUCKY 40383
KENTUCKY ENGINEERING GROUP, PLLC

WATER TREATMENT PLANT
GAC FACILITY
FOR THE
CITY OF CYNTHIANA

SITE GRADING PLAN

PROJECT NO. 25009

SHEET NO. C-0-2

BID DOCUMENTS

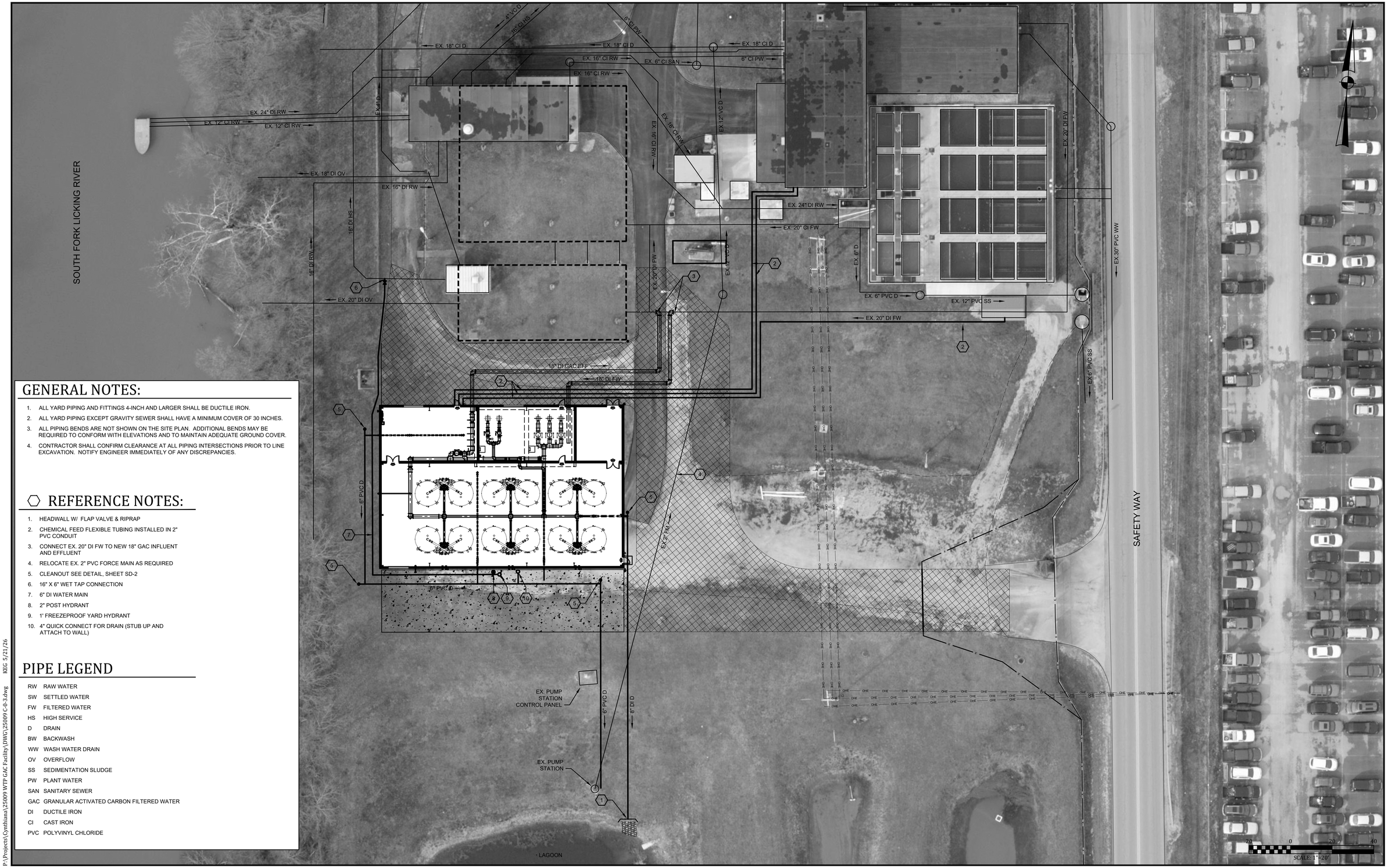

GENERAL NOTES:

1. ALL YARD PIPING AND FITTINGS 4-INCH AND LARGER SHALL BE DUCTILE IRON.
2. ALL YARD PIPING EXCEPT GRAVITY SEWER SHALL HAVE A MINIMUM COVER OF 30 INCHES.
3. ALL PIPING BENDS ARE NOT SHOWN ON THE SITE PLAN. ADDITIONAL BENDS MAY BE REQUIRED TO CONFORM WITH ELEVATIONS AND TO MAINTAIN ADEQUATE GROUND COVER.
4. CONTRACTOR SHALL CONFIRM CLEARANCE AT ALL PIPING INTERSECTIONS PRIOR TO LINE EXCAVATION. NOTIFY ENGINEER IMMEDIATELY OF ANY DISCREPANCIES.

⬡ REFERENCE NOTES:

1. HEADWALL W/ FLAP VALVE & RIPRAP
2. CHEMICAL FEED FLEXIBLE TUBING INSTALLED IN 2" PVC CONDUIT
3. CONNECT EX. 20" DI FW TO NEW 18" GAC INFLUENT AND EFFLUENT
4. RELOCATE EX. 2" PVC FORCE MAIN AS REQUIRED
5. CLEANOUT SEE DETAIL, SHEET SD-2
6. 16" X 6" WET TAP CONNECTION
7. 6" DI WATER MAIN
8. 2" POST HYDRANT
9. 1' FREEZEPROOF YARD HYDRANT
10. 4" QUICK CONNECT FOR DRAIN (STUB UP AND ATTACH TO WALL)

PIPE LEGEND

RW	RAW WATER
SW	SETTLED WATER
FW	FILTERED WATER
HS	HIGH SERVICE
D	DRAIN
BW	BACKWASH
WW	WASH WATER DRAIN
OV	OVERFLOW
SS	SEDIMENTATION SLUDGE
PW	PLANT WATER
SAN	SANITARY SEWER
GAC	GRANULAR ACTIVATED CARBON FILTERED WATER
DI	DUCTILE IRON
CI	CAST IRON
PVC	POLYVINYL CHLORIDE

KEG 5/21/26

P:\Projects\Cynthiana\25009 WTP GAC Facility\DWG\25009 C-0-3.dwg

IT IS A VIOLATION OF LAW FOR ANY PERSON TO ALTER THIS DRAWING WITHOUT WRITTEN PERMISSION FROM KENTUCKY ENGINEERING GROUP, PLLC AND ACTING UNDER THE DIRECTION OF A LICENSED ENGINEER.

THIS DRAWING WAS PREPARED AT THE SCALE INDICATED. INACCURACIES IN THE STATED SCALE MAY BE INTRODUCED WHEN DRAWINGS ARE REPRODUCED BY ANY MEANS. USE THE GRAPHIC SCALE BAR IN THE DRAWING OR TITLE BLOCK TO DETERMINE THE ACTUAL SCALE.

NO.	DATE	REVISIONS	BY

DATE:	FEBRUARY 2026
PROJECT MGR:	RCC
DRAWN BY:	JAB
CHECKED BY:	RCC
SCALE:	AS NOTED

2026 © Kentucky Engineering Group, PLLC

P.O. Box 1034
VERSAILLES, KENTUCKY 40383
KENTUCKY ENGINEERING GROUP, PLLC

WATER TREATMENT PLANT
GAC FACILITY
FOR THE
CITY OF CYNTHIANA

SITE PIPING PLAN

PROJECT NO. 25009

SHEET NO. C-0-3

BID DOCUMENTS

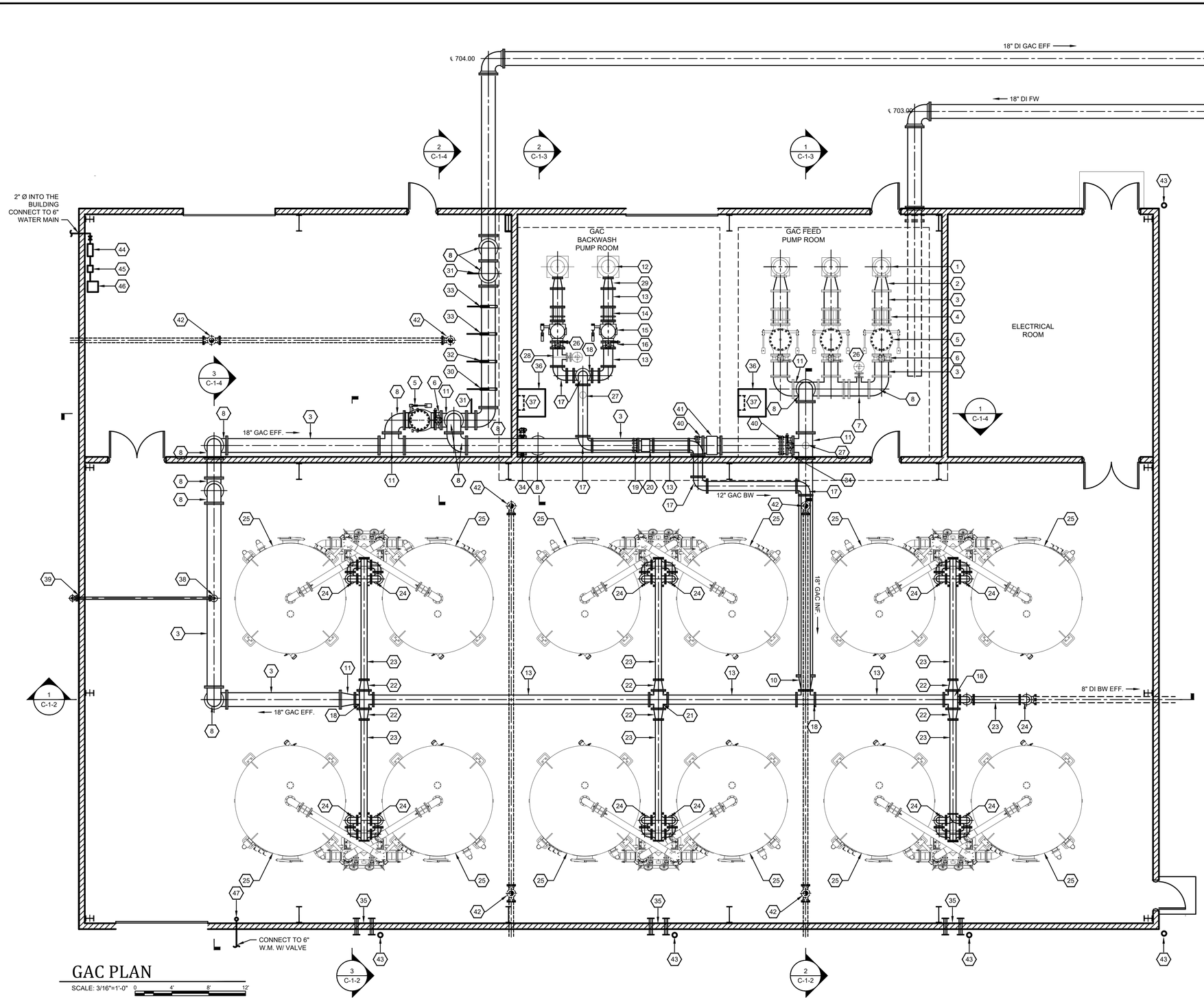

GAC PLAN

SCALE: 3/16"=1'-0" 0 4' 8' 12'

REFERENCE NOTES:

1. GAC PUMP
2. 18" X 12" DI ECCENTRIC REDUCER
3. 18" DI PIPE
4. 18" DISMANTLING JOINT
5. 18" SWING CHECK VALVE
6. 18" BUTTERFLY VALVE
7. 18" X 6" DI TEE
8. 18" DI 90° ELBOW
9. NOT USED
10. 18" X 12" DI REDUCER
11. 18" DI TEE
12. GAC BACKWASH PUMP
13. 12" DI PIPE
14. 12" DISMANTLING JOINT
15. 12" SWING CHECK VALVE
16. 12" BUTTERFLY VALVE
17. 12" DI 90° ELBOW
18. 12" DI TEE
19. 12" FLANGE COUPLING ADAPTER
20. 12" MAGNETIC FLOW METER
21. 12" DI CROSS
22. 12" X 8" DI REDUCER
23. 8" PIPE
24. 8" DI 90° ELBOW
25. GAC VESSEL
26. 6" SURGE RELIEF VALVE
27. AIR RELEASE VALVE (PLUMP BACK TO GAC WET WELL)
28. 12" X 6" DI TEE
29. 12"X 10" DI ECCENTRIC REDUCER
30. 1" PVC CHEMICAL FEED (FLUORIDE)
31. 1" PVC SAMPLE LINE (TYP.)
32. 1" PVC CHEMICAL FEED (Cl)
33. 1" PVC CHEMICAL FEED (MISC)
34. 18" BUTTERFLY VALVE W/ ELECTRIC MODULATING OPERATOR
35. GAC CARBON FILL / DISCHARGE CONNECTIONS - 4" QUICK CONNECT (TYP.) SEE DETAIL
36. 3'-0" X 3'-0" ALUMINUM ACCESS HATCH
37. FRP LADDER
38. COMBINATION AIR / VACUUM VALVE
39. 3" DI PIPE (PLUMB DOWN OUTSIDE WALL TO SPLASH PAD BELOW)
40. 18" FLANGE COUPLING ADAPTER
41. 18" MAGNETIC FLOW METER
42. 6" Ø FLOOR DRAIN
43. BOLLARD
44. BACKFLOW PREVENTER
45. PRESSURE REDUCING VALVE
46. MOP SINK
47. 1" HOSE BIB

GENERAL NOTES:

1. ALL MECHANICAL JOINT FITTINGS BELOW STRUCTURE SHALL BE RESTRAINED WITH ROMAC GLANDS AS SPECIFIED IN SECTION 02600
2. ALL PIPING SHALL BE APPROPRIATELY SUPPORTED (CONCRETE SUPPORTS AND MANUFACTURER'S PIPE SUPPORTS/HANGERS) TO PREVENT ANY UNDUE STRESSES ON FLANGED CONNECTIONS AND PREVENT PIPE SEPARATION.
3. 3' SPACING SHALL BE PROVIDED BETWEEN EACH CHEMICAL FEED POINT, SEE DETAIL.

P:\Projects\Cynthiana\25009 WTP GAC Facility\DWG\25009 C-1-1.dwg KEG 5/21/26

IT IS A VIOLATION OF LAW FOR ANY PERSON TO ALTER THIS DRAWING WITHOUT WRITTEN PERMISSION FROM KENTUCKY ENGINEERING GROUP, PLLC AND ACTING UNDER THE DIRECTION OF A LICENSED ENGINEER.

THIS DRAWING WAS PREPARED AT THE SCALE INDICATED. INACCURACIES IN THE STATED SCALE MAY BE INTRODUCED WHEN DRAWINGS ARE REPRODUCED BY ANY MEANS. USE THE GRAPHIC SCALE BAR IN THE DRAWING OR TITLE BLOCK TO DETERMINE THE ACTUAL SCALE.

NO.	DATE	REVISIONS	BY

DATE:	FEBRUARY 2026
PROJECT MGR:	RCC
DRAWN BY:	JAB
CHECKED BY:	RCC
SCALE:	AS NOTED

2026 © Kentucky Engineering Group, PLLC

P.O. Box 1034
VERSAILLES, KENTUCKY 40383
KENTUCKY ENGINEERING GROUP, PLLC

WATER TREATMENT PLANT
GAC FACILITY
FOR THE
CITY OF CYNTHIANA

GAC BUILDING PLAN

PROJECT NO. 25009

SHEET NO. C-1-1

BID DOCUMENTS

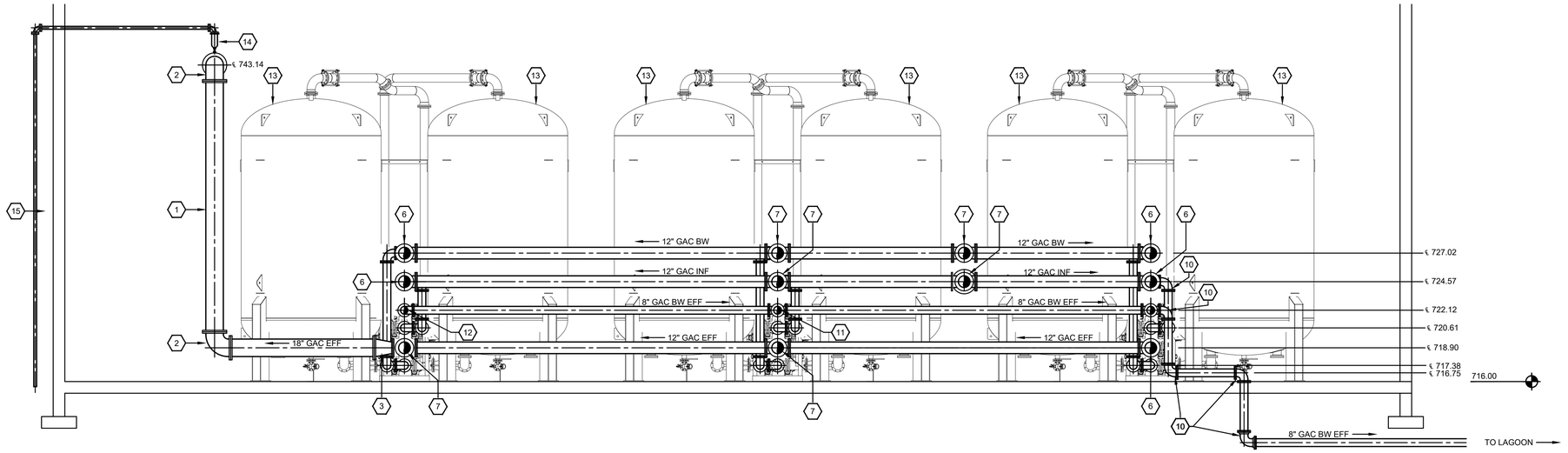

1 C-1-2 GAC BUILDING SECTION

SCALE: 3/16"=1'-0" 0 4' 8' 12'

REFERENCE NOTES:

1. 18" DI PIPE
2. 18" DI 90° ELBOW
3. 18" X 12" DI REDUCER
4. 12" DI PIPE
5. 12" DI 90° ELBOW
6. 12" DI TEE
7. 12" DI CROSS
8. 12" X 8" DI REDUCER
9. 8" PIPE
10. 8" DI 90° ELBOW
11. 8" DI CROSS
12. 8" DI TEE
13. GAC VESSEL
14. COMBINATION AIR / VACUUM VALVE
15. 3" DI PIPE (PLUMBED DOWN OUTSIDE WALL TO SPLASH PAD BELOW)
16. 18" DI TEE

GENERAL NOTES:

1. ALL MECHANICAL JOINT FITTINGS BELOW STRUCTURE SHALL BE RESTRAINED WITH ROMAC GLANDS AS SPECIFIED IN SECTION 02600
2. ALL PIPING SHALL BE APPROPRIATELY SUPPORTED (CONCRETE SUPPORTS AND MANUFACTURER'S PIPE SUPPORTS/HANGERS) TO PREVENT ANY UNDUE STRESSES ON FLANGED CONNECTIONS AND PREVENT PIPE SEPARATION.

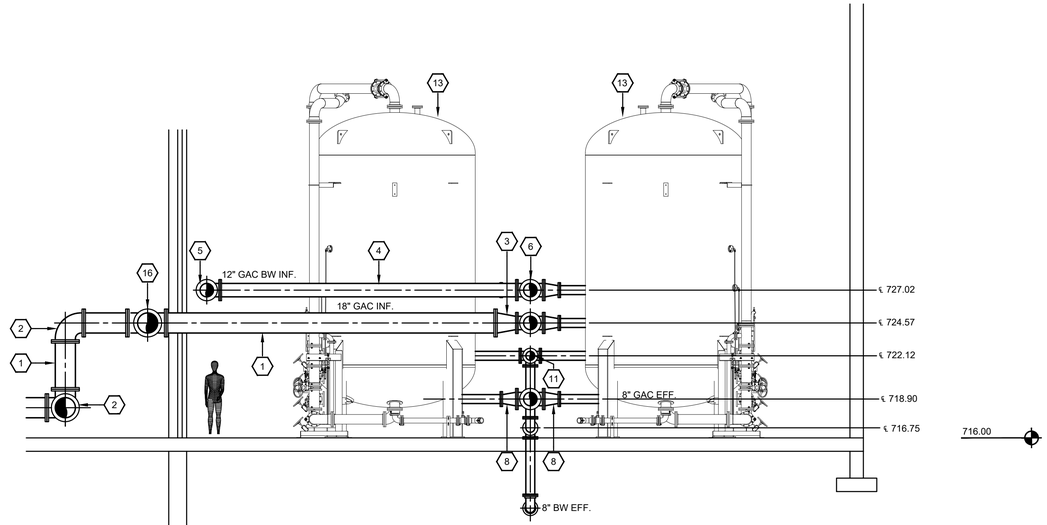

2 C-1-2 GAC BUILDING SECTION

SCALE: 3/16"=1'-0" 0 4' 8' 12'

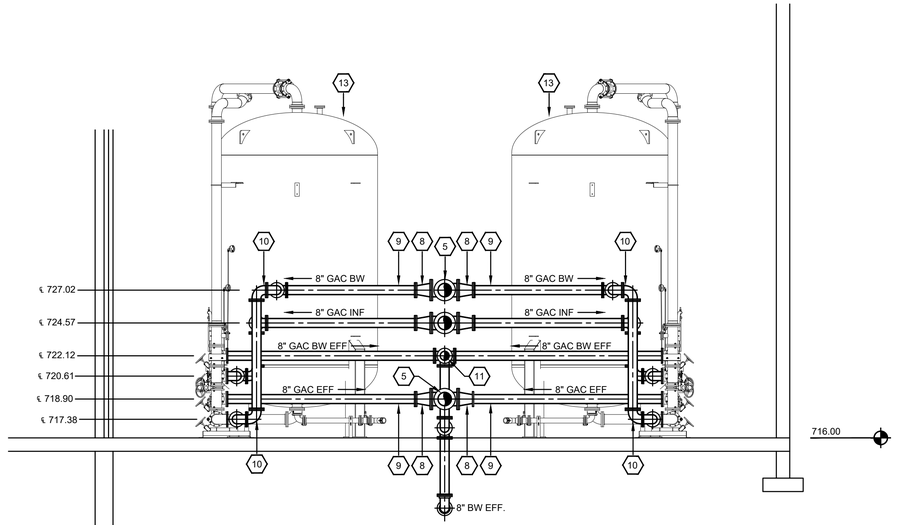

3 C-1-2 GAC BUILDING SECTION

SCALE: 3/16"=1'-0" 0 4' 8' 12'

IT IS A VIOLATION OF LAW FOR ANY PERSON TO ALTER THIS DRAWING WITHOUT WRITTEN PERMISSION FROM KENTUCKY ENGINEERING GROUP, PLLC AND ACTING UNDER THE DIRECTION OF A LICENSED ENGINEER.

THIS DRAWING WAS PREPARED AT THE SCALE INDICATED. INACCURACIES IN THE STATED SCALE MAY BE INTRODUCED WHEN DRAWINGS ARE REPRODUCED BY ANY MEANS. USE THE GRAPHIC SCALE BAR IN THE DRAWING OR TITLE BLOCK TO DETERMINE THE ACTUAL SCALE.

NO.	DATE	REVISIONS	BY

DATE:	FEBRUARY 2026
PROJECT MGR:	RCC
DRAWN BY:	JAB
CHECKED BY:	RCC
SCALE:	AS NOTED

2026 © Kentucky Engineering Group, PLLC

P.O. Box 1034
VERSAILLES, KENTUCKY 40383
KENTUCKY ENGINEERING GROUP, PLLC

WATER TREATMENT PLANT
GAC FACILITY
FOR THE
CITY OF CYNTHIANA

GAC BUILDING SECTIONS

PROJECT NO. 25009

SHEET NO. C-1-2

BID DOCUMENTS

P:\Projects\Cynthiana\25009 WTP GAC Facility\DWG\25009 C-1-2.dwg KEG 5/21/26

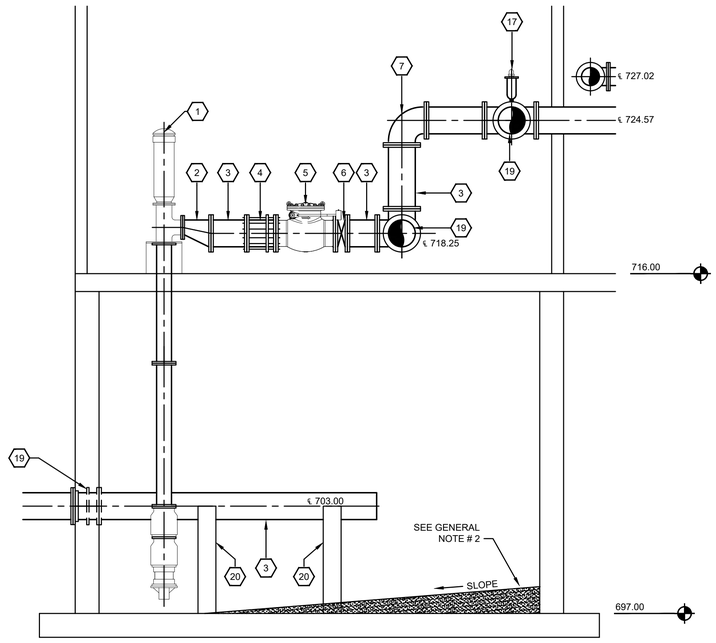

1 C-1-3 GAC FEED PUMPS SECTION

SCALE: 1/4"=1'-0" 0 2' 4' 8'

REFERENCE NOTES:

1. GAC PUMP
2. 18" X 12" DI ECCENTRIC REDUCER
3. 18" DI PIPE
4. 18" DISMANTLING JOINT
5. 18" SWING CHECK VALVE
6. 18" BUTTERFLY VALVE
7. 18" DI 90° ELBOW
8. NOT USED
9. GAC BACKWASH PUMP
10. 12"X 10" DI ECCENTRIC REDUCER
11. 12" DI PIPE
12. 12" DISMANTLING JOINT
13. 12" SWING CHECK VALVE
14. 12" BUTTERFLY VALVE
15. 12" X 6" DI TEE
16. 12" DI 90° ELBOW
17. AIR RELEASE VALVE (PLUMB TO GAC WET WELL)
18. 18" DI WALL PIPE W/ COLLAR, MJ X FLG. (TAPPED FOR STUDS)
19. 18" DI TEE
20. CONCRETE PIPE SUPPORT

GENERAL NOTES:

1. ALL PIPING SHALL BE APPROPRIATELY SUPPORTED (CONCRETE SUPPORTS AND MANUFACTURER'S PIPE SUPPORTS/HANGERS) TO PREVENT ANY UNDUE STRESSES ON FLANGED CONNECTIONS AND PREVENT PIPE SEPARATION.
2. GROUT FILL TO SLOPE FLOOR TOWARDS PUMPS

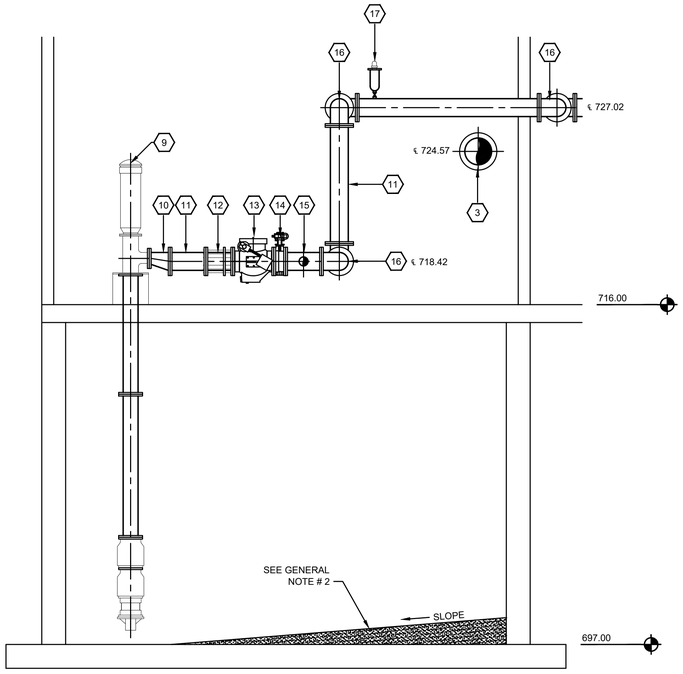

2 C-1-3 GAC BACKWASH PUMPS SECTION

SCALE: 1/4"=1'-0" 0 2' 4' 8'

P:\Projects\Cynthiana\25009 WTP GAC Facility\DWG\25009 C-1-3.dwg KEG 5/21/26

IT IS A VIOLATION OF LAW FOR ANY PERSON TO ALTER THIS DRAWING WITHOUT WRITTEN PERMISSION FROM KENTUCKY ENGINEERING GROUP, PLLC AND ACTING UNDER THE DIRECTION OF A LICENSED ENGINEER.

THIS DRAWING WAS PREPARED AT THE SCALE INDICATED. INACCURACIES IN THE STATED SCALE MAY BE INTRODUCED WHEN DRAWINGS ARE REPRODUCED BY ANY MEANS. USE THE GRAPHIC SCALE BAR IN THE DRAWING OR TITLE BLOCK TO DETERMINE THE ACTUAL SCALE.

NO.	DATE	REVISIONS	BY

DATE:	FEBRUARY 2026
PROJECT MGR:	RCC
DRAWN BY:	JAB
CHECKED BY:	RCC
SCALE:	AS NOTED

2026 © Kentucky Engineering Group, PLLC

P.O. Box 1034
VERSAILLES, KENTUCKY 40383
KENTUCKY ENGINEERING GROUP, PLLC

WATER TREATMENT PLANT
GAC FACILITY
FOR THE
CITY OF CYNTHIANA

GAC PUMP STATION
SECTIONS

PROJECT NO. 25009

SHEET NO. C-1-3

BID DOCUMENTS

REFERENCE NOTES:

1. 18" DI TEE
2. 18" BUTTERFLY VALVE W/ ELECTRIC MODULATING OPERATER
3. 18" FLANGE COUPLING ADAPTER
4. 18" DI PIPE
5. 18" MAGNETIC FLOW METER VALVE
6. 18" DI 90° ELBOW
7. 18 DI WALL PIPE W/ COLLAR, FLG X FLG
8. 18" SWING CHECK VALVE
9. 1" PVC CHEMICAL FEED (FLUORIDE)
10. 1" PVC SAMPLE LINE (TYP.)
11. 1" PVC CHEMICAL FEED (Cl)
12. 1" PVC CHEMICAL FEED (MISC)
13. 18" DI MJ RJ 90° ELBOW
14. 12" DI 90° ELBOW
15. 12" DI PIPE
16. 12" MAGNETIC FLOW METER
17. 12" FLANGE COUPLING ADAPTER
18. SAMPLE PUMP (PRE-CHEM), SUPPORT W/ UNISTRUT
19. SAMPLE PUMP (POST-CHEM), SUPPORT W/ UNISTRUT

GENERAL NOTES:

1. ALL PIPING SHALL BE APPROPRIATELY SUPPORTED (CONCRETE SUPPORTS AND MANUFACTURER'S PIPE SUPPORTS/HANGERS) TO PREVENT ANY UNDUE STRESSES ON FLANGED CONNECTIONS AND PREVENT PIPE SEPARATION.
2. GROUT FILL TO SLOPE FLOOR TOWARDS PUMPS
3. 3' SPACING SHALL BE PROVIDED BETWEEN EACH CHEMICAL FEED INJECTION POINT, SEE DETAIL SHEET SD-1.
4. SAMPLING TUBING SHALL BE INSTALLED IN A 2" CONDUIT & EXTENDED TO A POINT OF TERMINATION IN THE LAB.

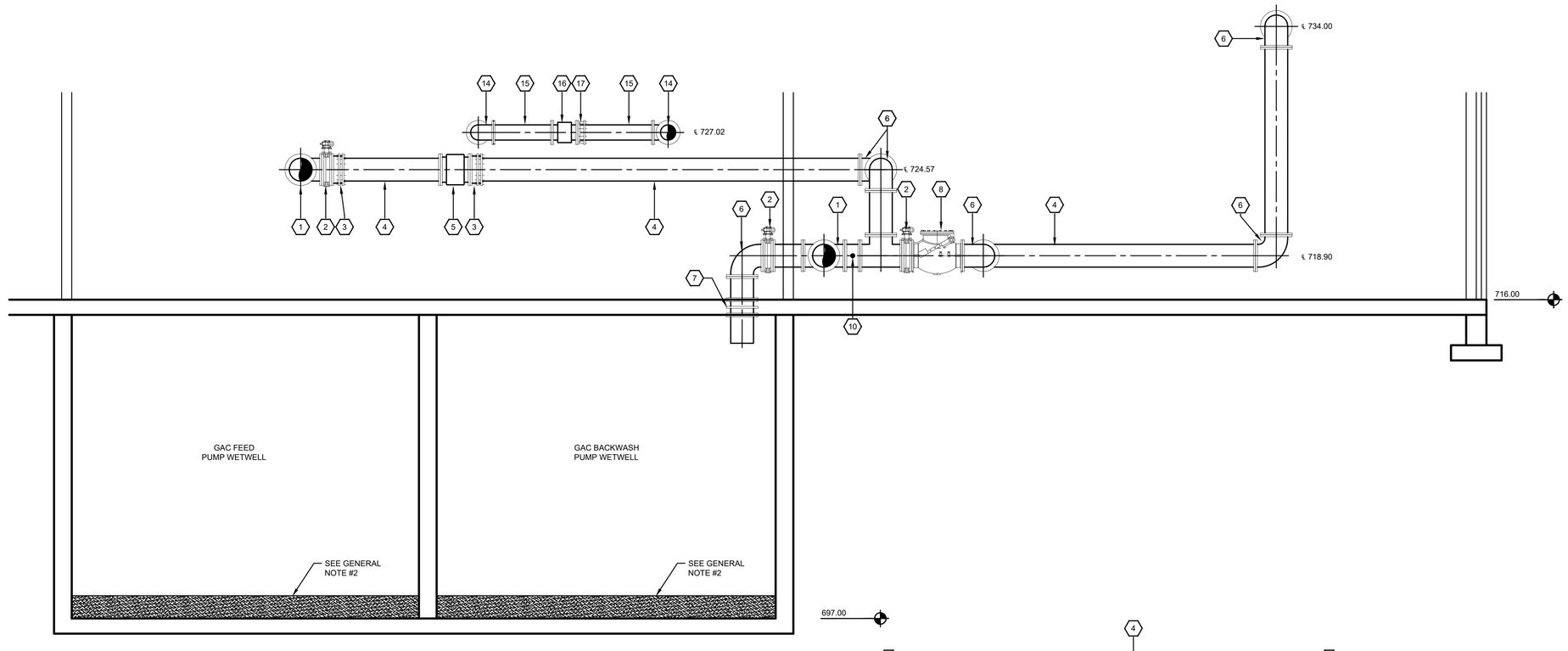

1 C-1-4 GAC BUILDING SECTION
SCALE: 1/4"=1'-0"

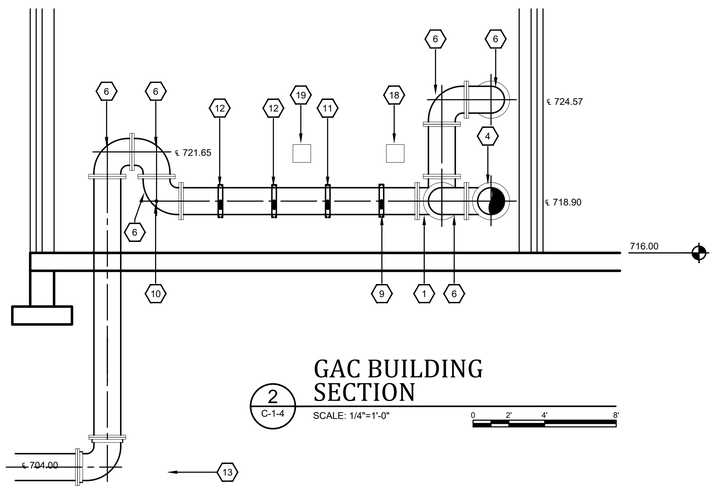

2 C-1-4 GAC BUILDING SECTION
SCALE: 1/4"=1'-0"

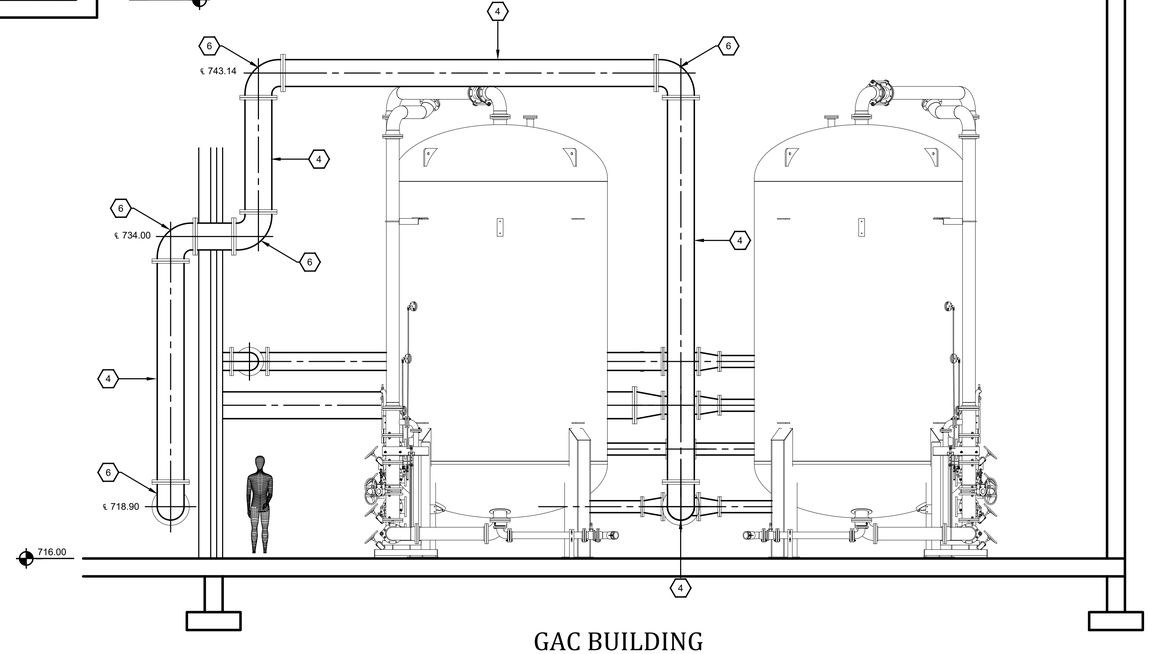

3 C-1-4 GAC BUILDING SECTION
SCALE: 1/4"=1'-0"

P:\Projects\Cynthiana\25009 WTP GAC Facility\DWG\25009 C-1-4.dwg KEG 5/21/26

IT IS A VIOLATION OF LAW FOR ANY PERSON TO ALTER THIS DRAWING WITHOUT WRITTEN PERMISSION FROM KENTUCKY ENGINEERING GROUP, PLLC AND ACTING UNDER THE DIRECTION OF A LICENSED ENGINEER.

THIS DRAWING WAS PREPARED AT THE SCALE INDICATED. INACCURACIES IN THE STATED SCALE MAY BE INTRODUCED WHEN DRAWINGS ARE REPRODUCED BY ANY MEANS. USE THE GRAPHIC SCALE BAR IN THE DRAWING OR TITLE BLOCK TO DETERMINE THE ACTUAL SCALE.

NO.	DATE	REVISIONS	BY

DATE:	FEBRUARY 2026
PROJECT MGR:	RCC
DRAWN BY:	JAB
CHECKED BY:	RCC
SCALE:	AS NOTED

2026 © Kentucky Engineering Group, PLLC

P.O. Box 1034
VERSAILLES, KENTUCKY 40383
KENTUCKY ENGINEERING GROUP, PLLC

WATER TREATMENT PLANT
GAC FACILITY
FOR THE
CITY OF CYNTHIANA

GAC PUMP STATION
SECTIONS

PROJECT NO. 25009

SHEET NO. C-1-4

BID DOCUMENTS

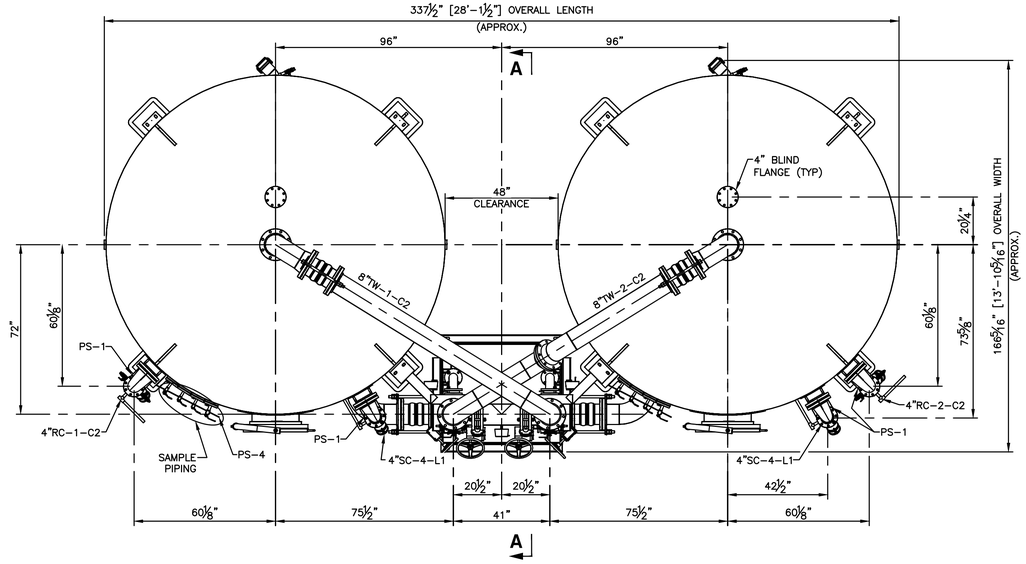

PLAN

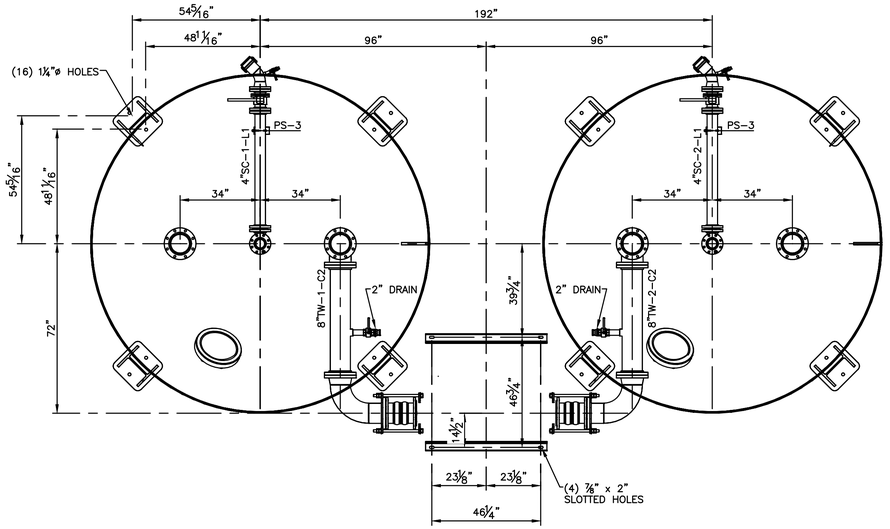

LOWER PLAN

SYSTEM DATA			
DESIGN CONDITIONS	125 PSIG @ 140° F		
DESIGN CODE	ASME SECTION VIII DIVISION1		
APPROXIMATE WEIGHTS (LB.)			
VESSEL (EMPTY)	31,000		
CARBON (PER VESSEL)	40,000		
VESSEL (OPERATING)	191,000		
SYSTEM (EMPTY)	69,000		
SYSTEM (OPERATING)	391,000		
PAINT INFORMATION			
ITEM	MFG.	COLOR	SAMPLE
VESSEL	HEMPEL	GRAY	
PIPING	HEMPEL	GRAY	
SUPPORTS	HEMPEL	GRAY	

PIPE SUPPORT SCHEDULE			
#	DRAWING NO.	DESCRIPTION	QTY.
PS-1	90170401	4" CARBON FILL	6
PS-2			
PS-3	90130158	4" CARBON DISCHARGE	2
PS-4	90170541	SAMPLE AND VENT	2

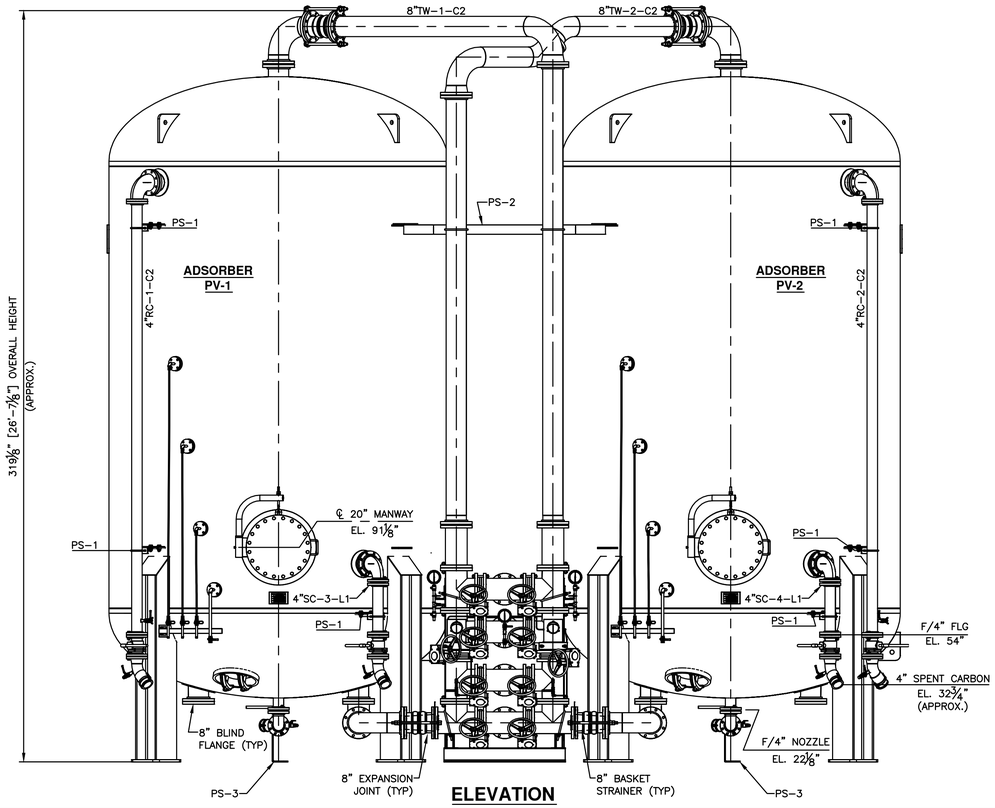

ELEVATION

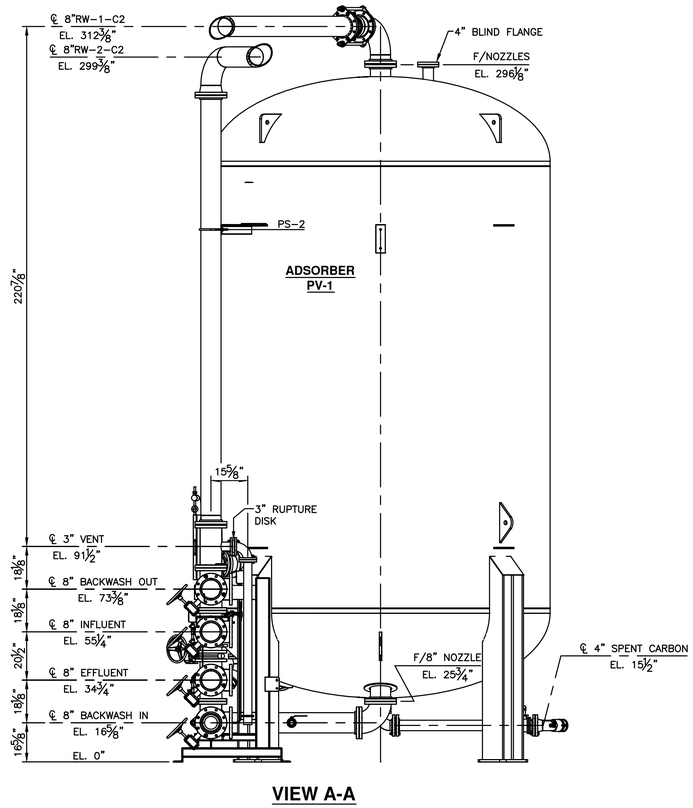

VIEW A-A

IT IS A VIOLATION OF LAW FOR ANY PERSON TO ALTER THIS DRAWING WITHOUT WRITTEN PERMISSION FROM KENTUCKY ENGINEERING GROUP, PLLC AND ACTING UNDER THE DIRECTION OF A LICENSED ENGINEER.

THIS DRAWING WAS PREPARED AT THE SCALE INDICATED. INACCURACIES IN THE STATED SCALE MAY BE INTRODUCED WHEN DRAWINGS ARE REPRODUCED BY ANY MEANS. USE THE GRAPHIC SCALE BAR IN THE DRAWING OR TITLE BLOCK TO DETERMINE THE ACTUAL SCALE.

NO.	DATE	REVISIONS	BY

DATE:	FEBRUARY 2026
PROJECT MGR:	RCC
DRAWN BY:	JAB
CHECKED BY:	RCC
SCALE:	AS NOTED

2026 © Kentucky Engineering Group, PLLC

P.O. Box 1034
VERSAILLES, KENTUCKY 40383
KENTUCKY ENGINEERING GROUP, PLLC

WATER TREATMENT PLANT
GAC FACILITY
FOR THE
CITY OF CYNTHIANA

GAC SYSTEM
DETAILS

PROJECT NO. 25009

SHEET NO. C-1-5

BID DOCUMENTS

P:\Projects\Cynthiana\25009 WTP GAC Facility\DWG\25009 C-1-5.dwg KEG 5/21/26

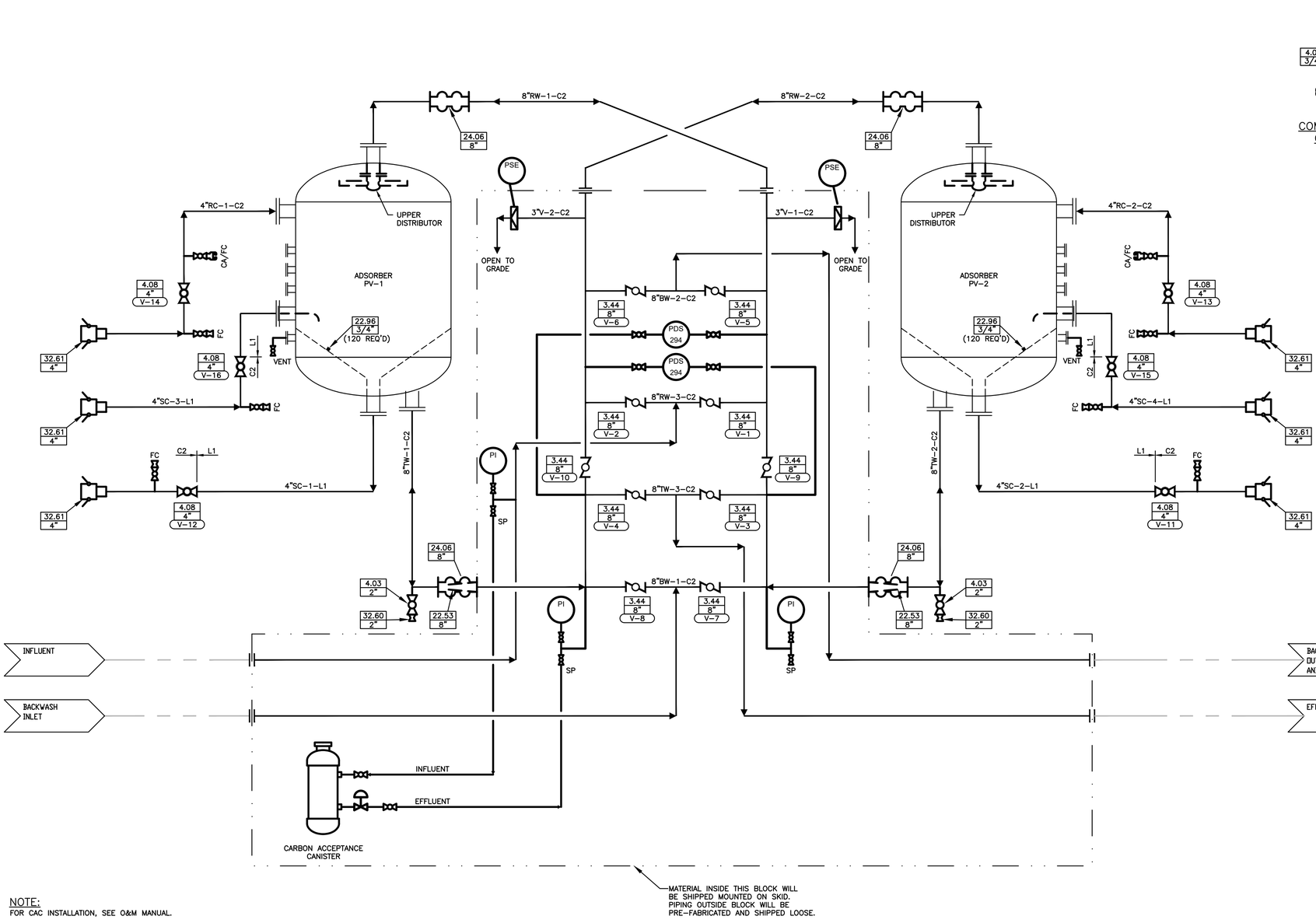

NOTE:
FOR CAC INSTALLATION, SEE O&M MANUAL.

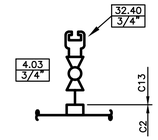

COMP. AIR/FLUSH CONNECTION
2 REQ'D

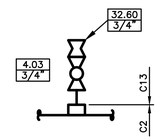

FLUSH CONNECTION
6 REQ'D

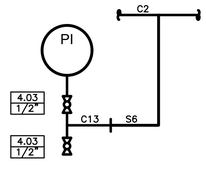

PRESSURE GAGE & SAMPLE POINT
2 REQ'D

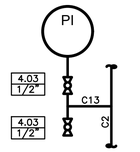

PRESSURE GAGE & SAMPLE POINT
1 REQ'D

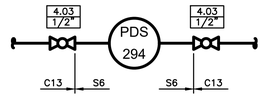

PRESSURE DIFFERENTIAL SWITCH
2 REQ'D

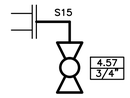

VENT
2 REQ'D

MEDIA

MEDIA: GAC
QUANTITY PER VESSEL: 40,000 LBS.
SERVICE: POTABLE

INSTRUMENTATION

PI 217
PSE 577 FOR 100 psig MAX. OPER. PRESS.
PDS 294

DESIGN CONDITIONS

FLOW RATE – 1000 GPM (SERIES)
1400 GPM (PARALLEL)
INFLUENT PRESSURE – 100 PSIG MAX.
INFLUENT TEMP. – 120°F MAX.
BACKWASH RATE – 1000 GPM MAX.
ELECTRIC POWER – 120 V, 60~ SINGLE PHASE, 15 AMP

LEGEND

BW – BACKWASH WATER
FC – FLUSH CONNECTION
RC – REACT.(OR VIRGIN) CARBON
RW – RAW WATER
SC – SPENT CARBON SLURRY
SP – SAMPLE PORT
TW – TREATED WATER
V – VENT

ADSORBERS

12'-0" O.D. x 16'-0" S.S.
ASME 2:1 ELLIPTICAL TOP AND BOTTOM HEADS.
CARBON STEEL CONSTRUCTION.
ASME SECT. VIII, DIV. 1
W/ PLASITE 4110 LINING
125 PSIG @ 140°F DESIGN.

UTILITY REQUIREMENTS

AIR, CARBON TRANSFER –
100 SCFM @ 30 PSIG MIN.
PLANT WATER –
100 GPM @ 30 PSIG MIN.
WIRING –
MIN. AWG #16 TO PDS 294

P:\Projects\Cynthiana\25009 WTP GAC Facility\DWG\25009 C-1-6.dwg KEC 5/21/26

IT IS A VIOLATION OF LAW FOR ANY PERSON TO ALTER THIS DRAWING WITHOUT WRITTEN PERMISSION FROM KENTUCKY ENGINEERING GROUP, PLLC AND ACTING UNDER THE DIRECTION OF A LICENSED ENGINEER.

THIS DRAWING WAS PREPARED AT THE SCALE INDICATED. INACCURACIES IN THE STATED SCALE MAY BE INTRODUCED WHEN DRAWINGS ARE REPRODUCED BY ANY MEANS. USE THE GRAPHIC SCALE BAR IN THE DRAWING OR TITLE BLOCK TO DETERMINE THE ACTUAL SCALE.

NO.	DATE	REVISIONS	BY

DATE:	FEBRUARY 2026
PROJECT MGR:	RCC
DRAWN BY:	JAB
CHECKED BY:	RCC
SCALE:	AS NOTED

2026 © Kentucky Engineering Group, PLLC

P.O. Box 1034
VERSAILLES, KENTUCKY 40383
KENTUCKY ENGINEERING GROUP, PLLC

WATER TREATMENT PLANT
GAC FACILITY
FOR THE
CITY OF CYNTHIANA

GAC SYSTEM SCHEMATIC

PROJECT NO. 25009

SHEET NO. C-1-6

BID DOCUMENTS

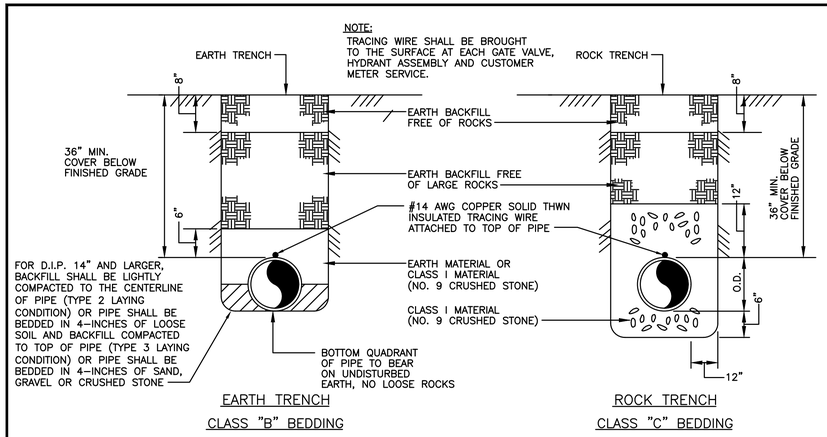

EARTH TRENCH
CLASS "B" BEDDING

ROCK TRENCH
CLASS "C" BEDDING

TYPICAL BEDDING and BACKFILL

NOT TO SCALE

THRUST BLOCK SCHEDULE – CLASS 200 PVC																								SOIL TYPE – SAND & GRAVEL BEARING STRENGTH = 3000 PSF					
PIPE SIZE	90° BEND					45° BEND					22 ½° BEND					11 ¼° BEND					TEE & DEAD ENDS							
	BEARING AREA	YDS OF CONCRETE	D	W	L	BEARING AREA	YDS OF CONCRETE	D	W	L	BEARING AREA	YDS OF CONCRETE	D	W	L	BEARING AREA	YDS OF CONCRETE	D	W	L	BEARING AREA	YDS OF CONCRETE	D	W	L
4"	1.78	0.07	12"	16"	16"	1.00	0.04	12"	12"	12"	0.50	0.02	12"	12"	6"	0.25	0.01	6"	6"	6"	1.50	0.06	12"	18"	12"
6"	4.00	0.15	12"	24"	24"	2.25	0.08	12"	18"	18"	1.33	0.05	12"	16"	12"	0.56	0.01	6"	8"	8"	3.00	0.11	12"	24"	18"
8"	7.50	0.42	18"	36"	30"	4.00	0.22	18"	24"	24"	2.00	0.11	18"	18"	16"	1.00	0.04	12"	12"	12"	5.00	0.28	18'	30"	24"
10"	11.67	0.65	18"	42"	40"	6.25	0.35	18"	30"	30"	3.33	0.19	18"	24"	20"	2.00	0.07	12"	18"	16"	8.75	0.49	18"	42"	30"
12"	16.00	0.89	18"	48"	48"	9.00	0.50	18"	36"	36"	5.00	0.28	18"	30"	24"	2.22	0.08	12"	20"	16"	14.00	0.78	18"	48"	42"
14"	22.50	1.67	24"	60"	54"	12.25	0.91	24"	42"	42"	6.25	0.46	24"	30"	30"	3.33	0.19	18"	24"	20"	17.50	1.30	24"	60"	42"
16"	30.00	2.22	24"	72"	60"	16.00	1.19	24"	48"	48"	9.00	0.67	24"	36"	36"	4.00	0.22	18"	24"	24"	20.00	1.48	24"	60"	48"

THRUST BLOCK SCHEDULE – CLASS 250 PVC																								SOIL TYPE – SAND & GRAVEL BEARING STRENGTH = 3000 PSF					
PIPE SIZE	90° BEND					45° BEND					22 ½° BEND					11 ¼° BEND					TEE & DEAD ENDS							
	BEARING AREA	YDS OF CONCRETE	D	W	L	BEARING AREA	YDS OF CONCRETE	D	W	L	BEARING AREA	YDS OF CONCRETE	D	W	L	BEARING AREA	YDS OF CONCRETE	D	W	L	BEARING AREA	YDS OF CONCRETE	D	W	L
4"	2.667	.10	12	24	16	1.500	.06	12	18	12	.750	.03	12	12	9	.500	.01	6	12	6	1.667	.06	12	24	10
6"	5.000	.19	12	36	20	3.000	.11	12	24	18	1.500	.06	12	18	12	.750	.01	6	12	9	4.000	.15	12	24	24
8"	9.000	.50	18	36	36	5.000	.28	18	36	20	3.000	.17	18	24	18	1.500	.06	12	18	12	7.000	.39	18	42	24
10"	9.255	.78	18	48	42	7.500	.42	18	36	30	4.167	.23	18	30	20	2.250	.08	12	18	18	10.500	.58	18	42	36
12"	13.327	1.11	18	60	48	12.000	.67	18	48	36	6.000	.33	18	36	24	3.000	.11	12	24	18	14.000	.78	18	48	42
14"	18.139	2.00	24	72	54	15.750	1.17	24	54	42	7.500	.56	24	36	30	4.000	.22	18	24	24	20.000	1.48	24	60	48
16"	23.692	2.65	24	78	66	20.000	1.48	24	60	48	10.500	.78	24	42	36	5.000	.28	18	30	24	27.000	2.00	24	72	54

THRUST-BLOCKING SCHEDULE

NOT TO SCALE

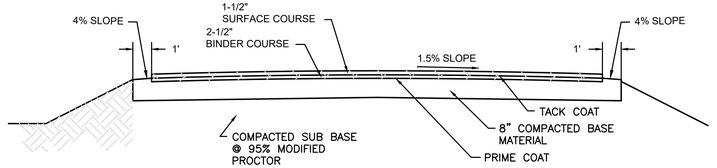

NOTES:

1. AGGREGATE BASE SHALL BE IN ACCORDANCE WITH KDOH SECT. 302.
2. PRIME COAT SHALL BE IN ACCORDANCE WITH KDOH SECT. 406.
3. TYPE 'D' ASPHALT SHALL BE IN ACCORDANCE WITH KDOH SECT. 403.

ASPHALT PAVEMENT

NOT TO SCALE

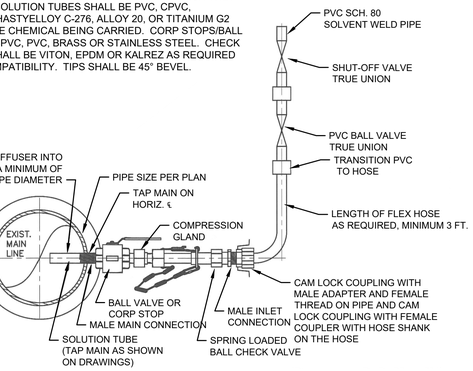

CHEMICAL FEED INJECTION POINT

NOT TO SCALE

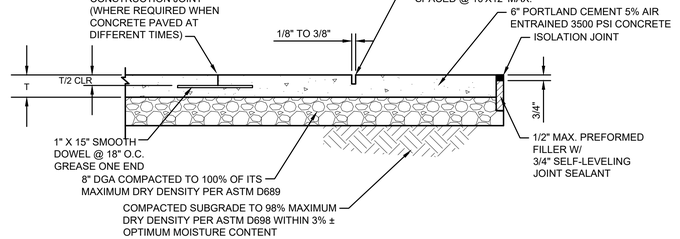

CONCRETE PAVEMENT DETAIL

NOT TO SCALE

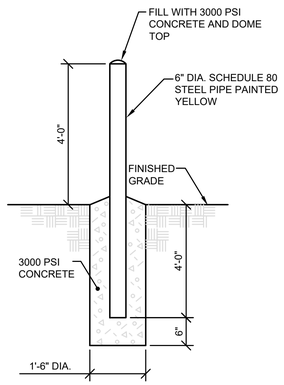

BOLLARD

NOT TO SCALE

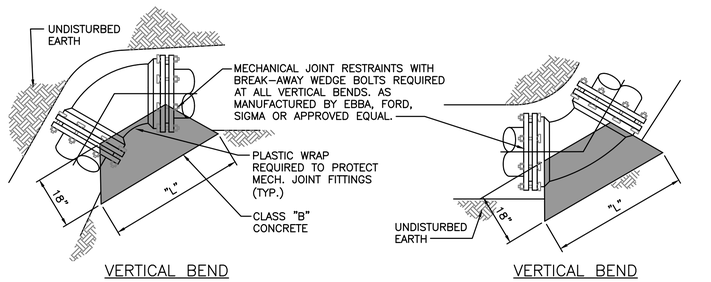

VERTICAL BEND
(SEE THRUST BLOCK SCHEDULE FOR DIMENSIONS OF BLOCKING)

VERTICAL BEND
(SEE THRUST BLOCK SCHEDULE FOR DIMENSIONS OF BLOCKING)

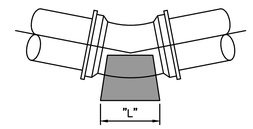

1¼°, 22½° AND 45° BEND THRUST BLOCKS
(SEE THRUST BLOCK SCHEDULE FOR DIMENSIONS OF BLOCKING)

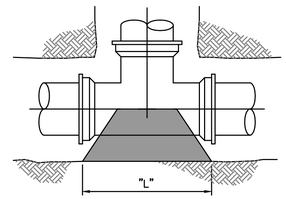

TEE THRUST BLOCKS
(SEE THRUST BLOCK SCHEDULE FOR DIMENSIONS OF BLOCKING)

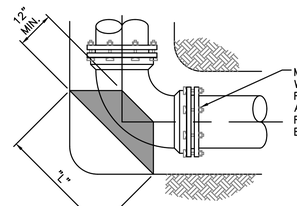

90° BEND THRUST BLOCKS
(SEE THRUST BLOCK SCHEDULE FOR DIMENSIONS OF BLOCKING)

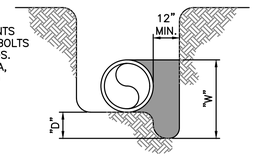

SECTION–TYP. THRUST BLOCK
(SEE THRUST BLOCK SCHEDULE FOR DIMENSIONS OF BLOCKING)

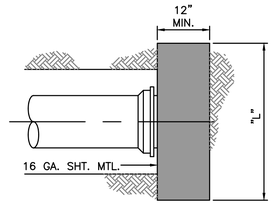

END OF MAIN THRUST BLOCKS
(SEE THRUST BLOCK SCHEDULE FOR DIMENSIONS OF BLOCKING)

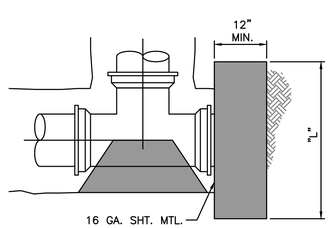

PLUGGED TEE THRUST BLOCKS
(SEE THRUST BLOCK SCHEDULE FOR DIMENSIONS OF BLOCKING)

THRUST-BLOCKING DETAIL

NOT TO SCALE

P:\Projects\Cynthiana\25009 WTP GAC Facility\DWG\25009 SD-1.dwg KEG 5/21/26

IT IS A VIOLATION OF LAW FOR ANY PERSON TO ALTER THIS DRAWING WITHOUT WRITTEN PERMISSION FROM KENTUCKY ENGINEERING GROUP, PLLC AND ACTING UNDER THE DIRECTION OF A LICENSED ENGINEER.

THIS DRAWING WAS PREPARED AT THE SCALE INDICATED. INACCURACIES IN THE STATED SCALE MAY BE INTRODUCED WHEN DRAWINGS ARE REPRODUCED BY ANY MEANS. USE THE GRAPHIC SCALE BAR IN THE DRAWING OR TITLE BLOCK TO DETERMINE THE ACTUAL SCALE.

NO.	DATE	REVISIONS	BY

DATE:	FEBRUARY 2026
PROJECT MGR:	RCC
DRAWN BY:	JAB
CHECKED BY:	RCC
SCALE:	AS NOTED

2026 © Kentucky Engineering Group, PLLC

P.O. Box 1034
VERSAILLES, KENTUCKY 40383
KENTUCKY ENGINEERING GROUP, PLLC

WATER TREATMENT PLANT
GAC FACILITY
FOR THE
CITY OF CYNTHIANA

STANDARD DETAILS

PROJECT NO. 25009

SHEET NO. SD-1

BID DOCUMENTS

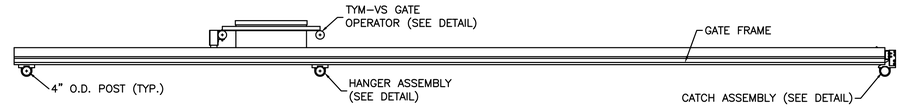

PLAN

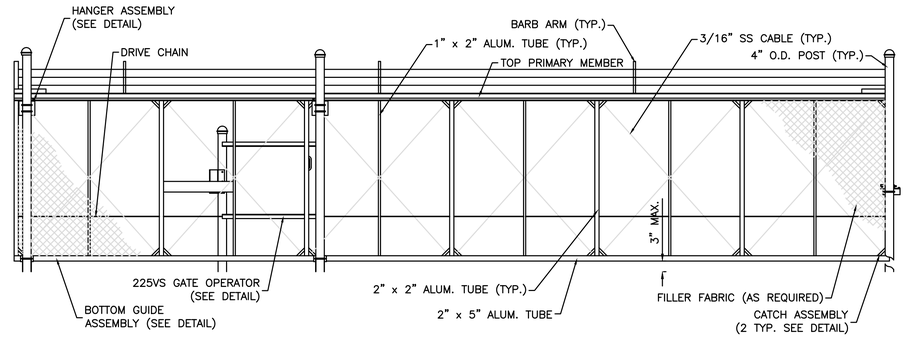

CANTILEVER GATE

NOT TO SCALE

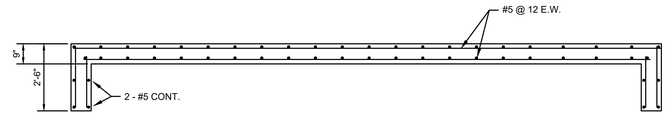

GENERATOR SLAB DETAIL (18' X 7')

NOT TO SCALE

P:\Projects\Cynthiana\25009 WTP GAC Facility\DWG\25009 SD-2.dwg KEG 5/21/26

IT IS A VIOLATION OF LAW FOR ANY PERSON TO ALTER THIS DRAWING WITHOUT WRITTEN PERMISSION FROM KENTUCKY ENGINEERING GROUP, PLLC AND ACTING UNDER THE DIRECTION OF A LICENSED ENGINEER.

THIS DRAWING WAS PREPARED AT THE SCALE INDICATED. INACCURACIES IN THE STATED SCALE MAY BE INTRODUCED WHEN DRAWINGS ARE REPRODUCED BY ANY MEANS. USE THE GRAPHIC SCALE BAR IN THE DRAWING OR TITLE BLOCK TO DETERMINE THE ACTUAL SCALE.

NO.	DATE	REVISIONS	BY

DATE:	FEBRUARY 2026
PROJECT MGR:	RCC
DRAWN BY:	JAB
CHECKED BY:	RCC
SCALE:	AS NOTED

2026 © Kentucky Engineering Group, PLLC

P.O. Box 1034
VERSAILLES, KENTUCKY 40383
KENTUCKY ENGINEERING GROUP, PLLC

WATER TREATMENT PLANT
GAC FACILITY
FOR THE
CITY OF CYNTHIANA

STANDARD DETAILS

PROJECT NO. 25009

SHEET NO. SD-2

BID DOCUMENTS

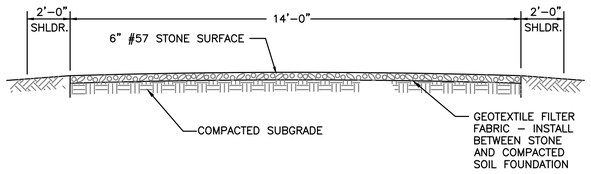

CONSTRUCTION ROAD STABILIZATION

NOT TO SCALE

NOTES:

1. TREES, STUMPS, ROOTS, BRUSH, WEEDS, AND OTHER OBJECTIONABLE MATERIALS SHALL BE REMOVED FROM THE WORK AREA.
2. UNSUITABLE MATERIAL SHALL BE REMOVED FROM THE ROADBED AND PARKING AREAS.
3. GRADING, SUBGRADE PREPARATION, AND COMPACTION SHALL BE DONE AS NEEDED. FILL MATERIAL SHALL BE DEPOSITED IN LAYERS NOT TO EXCEED 9 INCHES AND COMPACTED WITH THE CONTROLLED MOVEMENT OF COMPACTING AND EARTH MOVING EQUIPMENT.
4. THE ROADBED SHALL BE GRADED TO THE REQUIRED ELEVATION. SUBGRADE PREPARATION AND PLACEMENT OF THE SURFACE COURSE SHALL BE IN ACCORDANCE WITH SOUND ROADWAY CONSTRUCTION.
5. ALL CUT AND FILLS SHALL BE 2;1 OR FLATTER TO THE EXTENT POSSIBLE.
6. WATER BREAKS OR BARS MAY BE USED TO CONTROL SURFACE RUNOFF.
7. ROADS SHALL BE LAID OUT ACCORDING TO GOOD LANDSCAPE MANAGEMENT PRINCIPLES.
8. ALL ROADSIDE DITCHES, CUTS, FILLS, AND DISTURBED AREAS ADJACENT TO ROADS SHALL BE STABILIZED WITH APPROPRIATE TEMPORARY OR PERMANENT VEGETATION.

EROSION CONTROL NOTES

1. A KPDES STORMWATER PERMIT IS REQUIRED FOR THIS PROJECT. COVERAGE STARTS WHEN THE KY DIVISION OF WATER ACKNOWLEDGES RECEIPT OF A NOTICE OF INTENT FOR COVERAGE.
2. THE KPDES PERMIT REQUIRES THAT THE PERMITTEE SHALL MINIMIZE DISTURBANCE AND THE PERIOD OF TIME THAT THE DISTURBED AREA IS WITHOUT STABILIZATION PRACTICES.
3. FINAL STABILIZATION SHALL BEGIN WITHIN 14 DAYS ON AREAS OF THE SITE WHERE CONSTRUCTION ACTIVITIES HAVE PERMANENTLY CEASED OR HAVE BEEN SUSPENDED FOR MORE THAN 180 DAYS. WHEN SNOW COVER CAUSES DELAYS, STABILIZATION SHALL BEGIN AS SOON AS POSSIBLE. STABILIZATION PRACTICES INCLUDE SEEDING, MULCHING, PLACING SOD, PLANTING TREES OR SHRUBS, AND USING GEOTEXTILE FABRICS AND OTHER APPROPRIATE MEASURES. SEEDING RATES, DATES, AND MATERIALS MAY BE OBTAINED FROM THE LOCAL NATURAL RESOURCES CONSERVATION SERVICE FIELD OFFICE.
4. FOR ALL CRITICAL AREAS (WITHIN 25' OF A STREAM), SOIL STABILIZATION TECHNIQUES SHALL BE IMPLEMENTED WITHIN 24 HOURS OR AS SOON AS PRACTICAL AFTER COMPLETION OF GRADING OR DISTURBANCE. TEMPORARY STABILIZATION PRACTICES SHALL BE INITIATED WITHIN 14 DAYS OF CESSATION OF CONSTRUCTION ACTIVITIES.
5. A STORMWATER POLLUTION PREVENTION PLAN (SWPPP) SHALL BE DEVELOPED AND IMPLEMENTED AS OUTLINED IN THE KPDES STORMWATER PERMIT KYR 10.
6. SEDIMENT BASINS (DEBRIS BASINS, DESILTING BASINS, OR SEDIMENT TRAPS) SHALL BE PROPERLY DESIGNED.
7. SEDIMENT BASINS (DEBRIS BASINS, DESILTING BASINS, OR SEDIMENT TRAPS) SHALL BE INSTALLED DURING THE INITIAL GRADING AT LOCATIONS THAT WILL PROVIDE THE BEST PROTECTION FROM OFF-SITE DAMAGES.
8. ALL SLOPES EXCEEDING 3:1 SHALL HAVE EXTRA SLOPE PROTECTION SUCH AS NETTING.
9. A MULTI-PURPOSE BASIN USED FOR A SEDIMENT TRAP THAT IS THEN CONVERTED TO A DETENTION/RETENTION BASIN SHALL BE DREDGED PERIODICALLY DURING CONSTRUCTION ACTIVITIES AND AFTER STABILIZATION IN ORDER TO PROVIDE ADEQUATE STORAGE.
10. INLET PROTECTION IS REQUIRED TO MINIMIZE DISCHARGE OF SEDIMENT LADEN WATER.
11. SITE PERIMETER CONTROLS ARE REQUIRED AND SHALL BE INSTALLED TO PREVENT THE DEPOSIT OF SOIL AND DEBRIS FROM GRADED SURFACES ONTO PUBLIC STREETS, INTO DRAINAGE CHANNELS OR SEWERS, OR ONTO ADJOINING LAND.
12. EROSION CONTROL MEASURES SHOWN ARE THE MINIMUM REQUIRED, CONTRACTOR SHALL PROVIDE ADDITIONAL CONTROL AND REVISE THE CONTROLS AS NEEDED.

INSPECTIONS AND MAINTENANCE

1. ALL EROSION CONTROL MEASURES, DISCHARGE LOCATIONS, VEHICLE EXITS, DISTURBED AREAS OF THE SITE, AND MATERIALS STORAGE AREAS SHALL BE INSPECTED WEEKLY AND WITHIN 24 HOURS OF THE END OF A STORM THAT IS 0.5 INCHES OR GREATER. EACH INSPECTION MUST BE DOCUMENTED IN ACCORDANCE WITH THE KPDES GENERAL PERMIT FOR STORMWATER POINT SOURCE DISCHARGES FROM CONSTRUCTION ACTIVITIES (KYR10).
2. SEDIMENT ACCUMULATED AT THE SILT FENCES, INLET PROTECTION AREAS, AND OTHER SILT CHECK DEVICES SHOULD BE REMOVED NO LATER THAN WHEN IT REACHES 1/3 HEIGHT OF THE FENCE OR 9 INCHES MAXIMUM.
3. SEDIMENT MUST BE REMOVED FROM ANY SEDIMENT BASINS WHEN THE NO MORE THAN 1/3 VOLUME HAS BEEN FILLED WITH COLLECTED SEDIMENT.
4. ALL REQUIRED REPAIRS ARE TO BE MADE IMMEDIATELY.
5. REMOVED SEDIMENT MUST BE SPREAD AND VEGETATED OR OTHERWISE STABILIZED IN A MANNER THAT DOES NOT RESULT IN MUDDY RUNOFF TO NEARBY DITCHES AND WATERBODIES.
6. INSPECT THE CONSTRUCTION ENTRANCE DAILY TO ENSURE NO TRACKING OR DIRT ONTO LOCAL ROADWAYS. ALL SEDIMENT SPILLED, DROPPED, WASHED OR TRACKED ONTO PUBLIC ROADS MUST BE REMOVED IMMEDIATELY. SEE NOTE 3 FOR HANDLING OF REMOVED SEDIMENT.
7. MAINTAIN THE ENTRANCE AS NECESSARY TO PREVENT TRACKING OF DIRT.

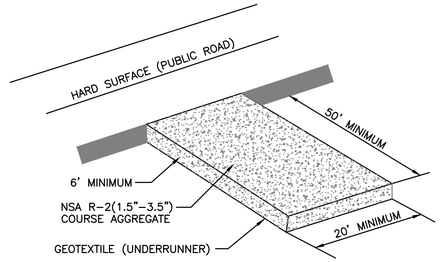

NOTES:

1. A STABILIZED ENTRANCE PAD OF CRUSHED STONE SHALL BE LOCATED WHERE TRAFFIC WILL ENTER OR LEAVE THE CONSTRUCTION SITE ONTO A PUBLIC STREET.
2. GEOTEXTILE (KYTC TYPE III) SHALL BE USED AS A BASE FOR THE CONSTRUCTION ENTRANCE.
3. THE ENTRANCE SHALL BE MAINTAINED IN A CONDITION WHICH SHALL PREVENT TRACKING OR FLOWING OF SEDIMENT ONTO PUBLIC STREETS OR EXISTING PAVEMENT. THIS MAY REQUIRE PERIODIC TOP DRESSING WITH ADDITIONAL STONE AS CONDITIONS WARRANT AND REPAIR OR CLEAN OUT OF ANY MEASURES USED TO TRAP SEDIMENT.
4. ANY SEDIMENT SPILLED, DROPPED, WASHED, OR TRACKED ONTO PUBLIC STREETS OR INTO STORM DRAINS MUST BE REMOVED IMMEDIATELY.
5. WHEN APPROPRIATE, WHEELS MUST BE CLEANED TO REMOVED SEDIMENT PRIOR TO ENTERING A PUBLIC STREET. WHEN WASHING IS REQUIRED, IT SHALL BE DONE IN AN AREA STABILIZED WITH CRUSHED STONE WHICH DRAINS INTO AN APPROVED SEDIMENT BASIN.

STABILIZED CONSTRUCTION ENTRANCE

NOT TO SCALE

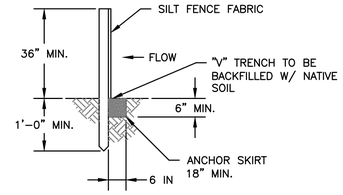

TRENCH DETAIL FOR SEDIMENT FENCE

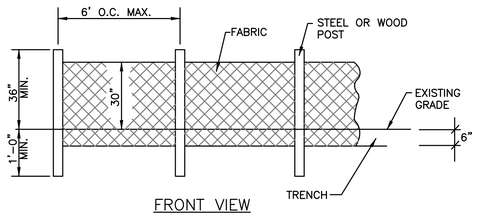

FRONT VIEW

NOTES:

1. GEOTEXTILE FABRIC SHALL BE PURCHASED IN A CONTINUOUS ROLL AND CUT TO THE LENGTH OF THE OF THE BARRIER. WHEN JOINTS CANNOT BE AVOID, GEOTEXTILE FABRIC SHALL BE SPLICED TOGETHER ONLY AT A POST WITH 3 FOOT MIN. OVERLAP, AND SECURELY SEALED.
2. POSTED SHALL BE AT LEAST 5 FEET IN LENGTH
3. STEEL POSTS SHALL HAVE PROJECTIONS FOR FASTENING WIRE AND FABRIC.
4. WOOD POSTS SHALL BE 2 INCHES BY 2 INCHES OR EQUIVALENT. STEEL POSTS SHALL BE 1/33 LBS PER LINEAR FOOT.
5. IF REQUIRED, A WIRE MESH SUPPORT FENCE SHALL BE FASTENED SECURELY TO THE UPSLOPE SIDE OF THE POSTS USING HEAVY DUTY WIRE STAPLES AT LEAST 1 INCH IN LENGTH, WIRE TIES, OR HOG RINGS. THE WIRE SHALL EXTEND INTO THE TRENCH A MINIMUM OF 2 INCHES AND SHALL NOT EXTEND MORE THAN 36 INCHES ABOVE THE ORIGINAL GROUND SURFACE
6. TURN SILT FENCE UP SLOPE AT ENDS.

SEDIMENT BARRIER

NOT TO SCALE

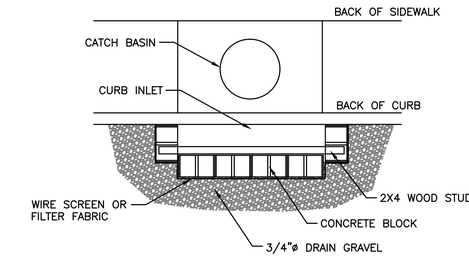

PLAN

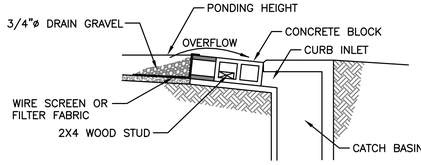

SECTION

NOTES:

1. USE BLOCK AND GRAVEL TYPE SEDIMENT BARRIER WHEN CURB INLET IS LOCATED IN GENTLY SLOPING STREET SEGMENT WHERE WATER CAN POND AND ALLOW SEDIMENT TO SEPARATE FROM RUNOFF.
2. BARRIER SHALL ALLOW FOR OVERFLOW FROM SEVERE STORM EVENT.
3. INSPECT BARRIERS AND REMOVE SEDIMENT AFTER EACH STORM EVENT. SEDIMENT AND GRAVEL MUST BE REMOVED FROM THE TRAVELED WAY IMMEDIATELY.

CURB INLET SEDIMENT BARRIER

NOT TO SCALE

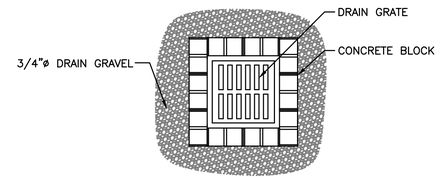

PLAN

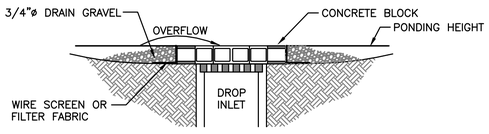

SECTION

NOTES:

1. DROP INLET SEDIMENT BARRIERS ARE TO BE USED FOR SMALL, NEARLY LEVEL DRAINAGE AREAS (LESS THAN 5% SLOPE)
2. EXCAVATE A BASIN OF SUFFICIENT SIZE ADJACENT TO THE DROP INLET.
3. THE TOP OF THE STRUCTURE (PONDING HEIGHT) MUST BE BELOW THE GROUND ELEVATION DOWNSLOPE TO PREVENT RUNOFF FROM BYPASSING THE INLET. A TEMPORARY DIKE MAY BE NECESSARY ON THE DOWNSLOPE SIDE OF THE STRUCTURE.

DROP INLET SEDIMENT BARRIER

NOT TO SCALE

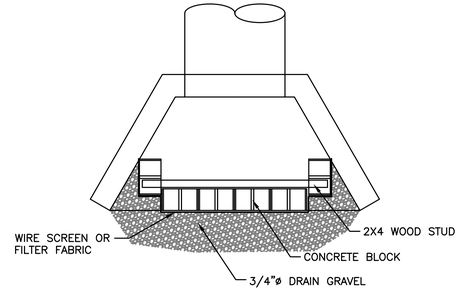

PLAN

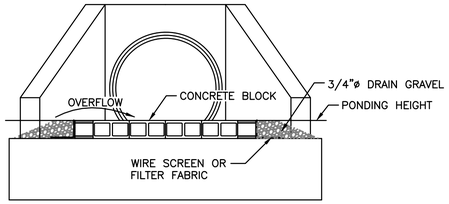

FRONT ELEVATION

CULVERT INLET SEDIMENT BARRIER

NOT TO SCALE

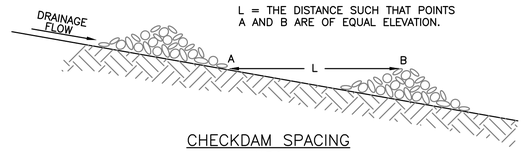

CHECKDAM SPACING

N.T.S.

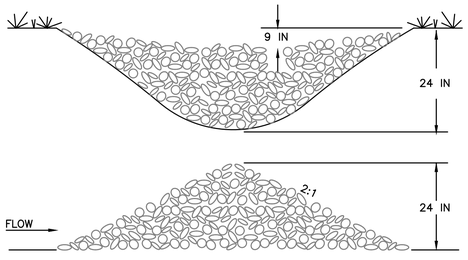

NOTES:

1. ROCK CHECK DAMS SHOULD BE CONSTRUCTED OF GRADED 5 TO 10 INCH STONE. MECHANICAL OR HAND PLACEMENTS SHALL BE REQUIRED TO ENSURE COMPLETE COVERAGE OF THE ENTIRE WIDTH OF DITCH OR SWALE AND THAT THE CENTER OF THE DAM IS LOWER THAN THE EDGES.
2. INSPECT BEHIND RIPRAP CHECKDAM DAILY AND CLEAN WHEN COLLECTED DEBRIS EXCEEDS HALF OF ITS DEPTH.

ROCK CHECK DAM

NOT TO SCALE

P:\Projects\Cynthiana\25009 WTP GAC Facility\DWG\25009 SD-3.dwg KEG 5/21/26

IT IS A VIOLATION OF LAW FOR ANY PERSON TO ALTER THIS DRAWING WITHOUT WRITTEN PERMISSION FROM KENTUCKY ENGINEERING GROUP, PLLC AND ACTING UNDER THE DIRECTION OF A LICENSED ENGINEER.

THIS DRAWING WAS PREPARED AT THE SCALE INDICATED. INACCURACIES IN THE STATED SCALE MAY BE INTRODUCED WHEN DRAWINGS ARE REPRODUCED BY ANY MEANS. USE THE GRAPHIC SCALE BAR IN THE DRAWING OR TITLE BLOCK TO DETERMINE THE ACTUAL SCALE.

NO.	DATE	REVISIONS	BY

DATE:	FEBRUARY 2026
PROJECT MGR:	RCC
DRAWN BY:	JAB
CHECKED BY:	RCC
SCALE:	AS NOTED

2026 © Kentucky Engineering Group, PLLC

P.O. Box 1034
VERSAILLES, KENTUCKY 40383
KENTUCKY ENGINEERING GROUP, PLLC

WATER TREATMENT PLANT
GAC FACILITY
FOR THE
CITY OF CYNTHIANA

EROSION CONTROL DETAILS

PROJECT NO. 25009

SHEET NO. SD-3

BID DOCUMENTS

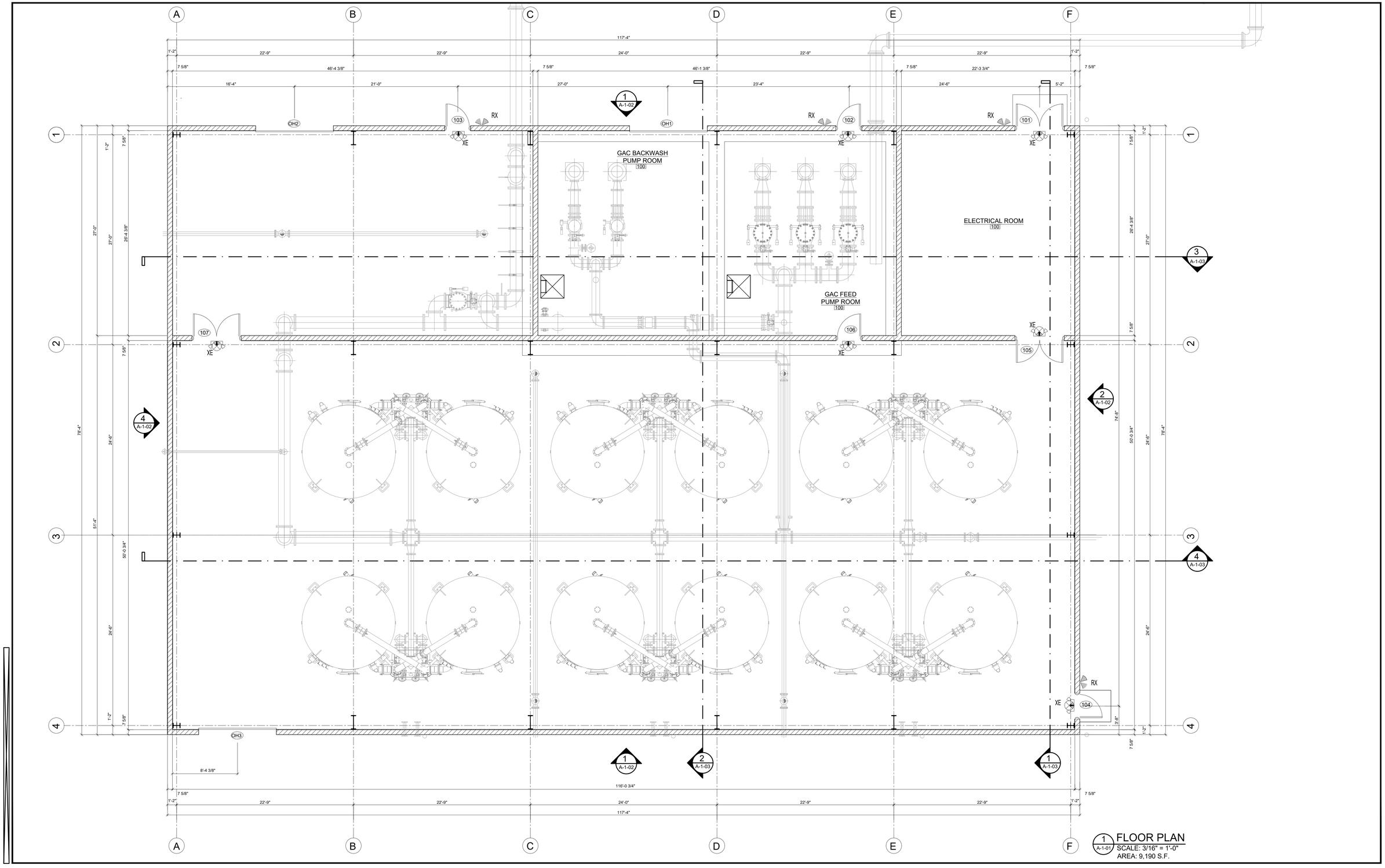

1 A-1-01 FLOOR PLAN
SCALE: 3/16" = 1'-0"
AREA: 9,190 S.F.

IT IS A VIOLATION OF LAW FOR ANY PERSON TO ALTER THIS DRAWING WITHOUT WRITTEN PERMISSION FROM KENTUCKY ENGINEERING GROUP, PLLC AND ACTING UNDER THE DIRECTION OF A LICENSED ENGINEER.

THIS DRAWING WAS PREPARED AT THE SCALE INDICATED. INACCURACIES IN THE STATED SCALE MAY BE INTRODUCED WHEN DRAWINGS ARE REPRODUCED BY ANY MEANS. USE THE GRAPHIC SCALE BAR IN THE DRAWING OR TITLE BLOCK TO DETERMINE THE ACTUAL SCALE.

NO.	DATE	REVISIONS	BY

DATE:	FEB 2026
PROJECT MGR:	RCC
DRAWN BY:	JBE
CHECKED BY:	JBE/RCC
SCALE:	AS NOTED

2025 © Kentucky Engineering Group, PLLC

P.O. Box 1034
VERSAILLES, KENTUCKY 40383
KENTUCKY ENGINEERING GROUP, PLLC

WATER TREATMENT PLANT
GAC FACILITY
FOR THE
CITY OF CYNTHIANA

GAC FACILITY BUILDING FLOOR PLAN

JOSEPH B. EARLY
REGISTERED NO. 3898
COMMONWEALTH OF KENTUCKY
ARCHITECT

PROJECT NO.
25009

SHEET NO.
A-1-01

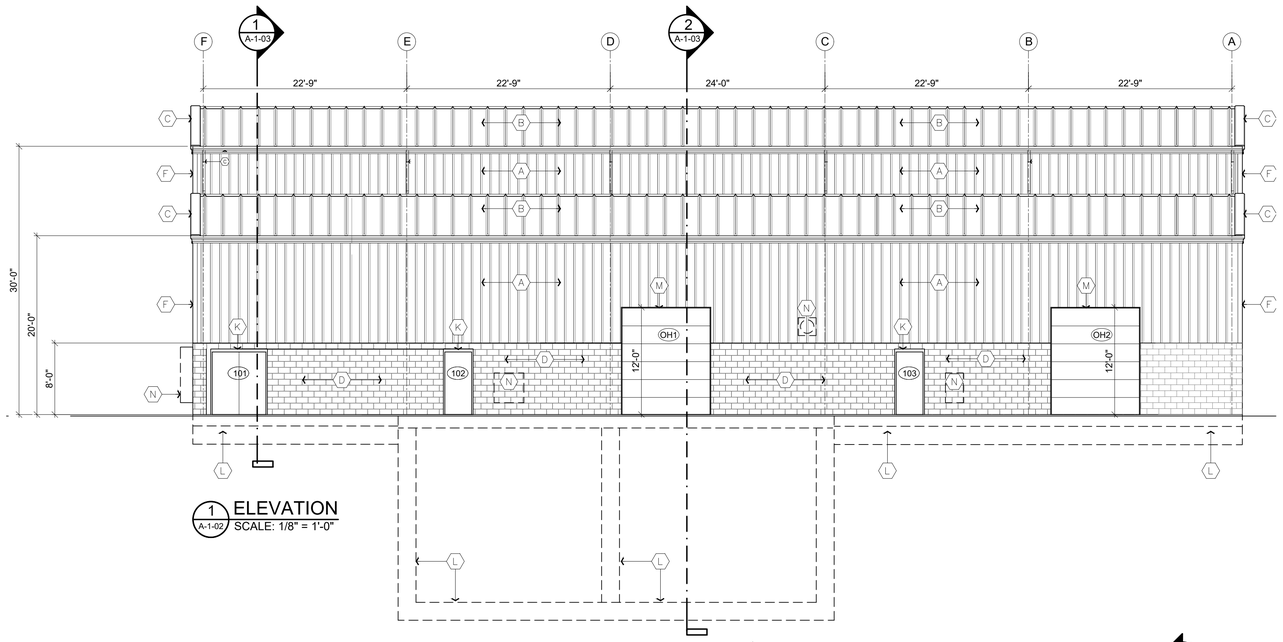

1 ELEVATION
A-1-02 SCALE: 1/8" = 1'-0"

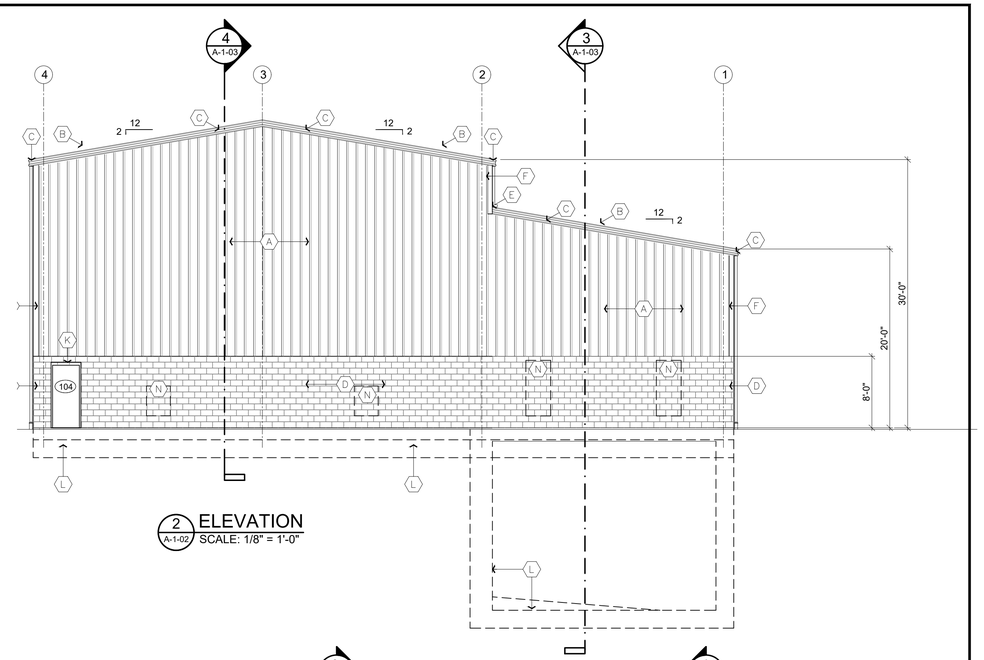

2 ELEVATION
A-1-02 SCALE: 1/8" = 1'-0"

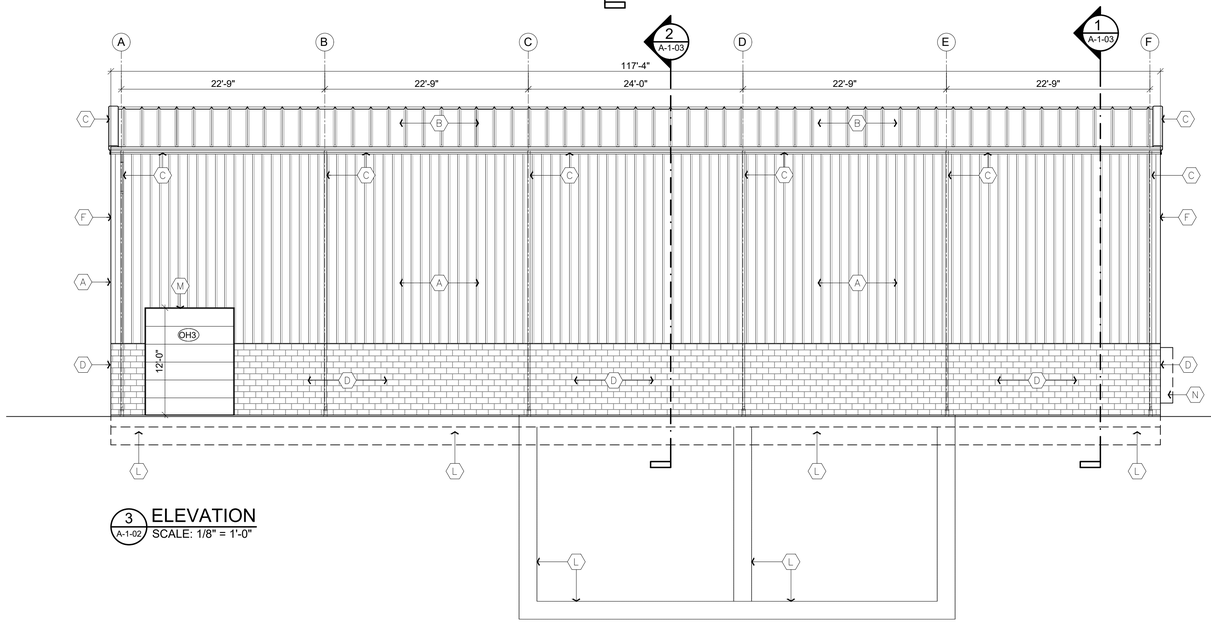

3 ELEVATION
A-1-02 SCALE: 1/8" = 1'-0"

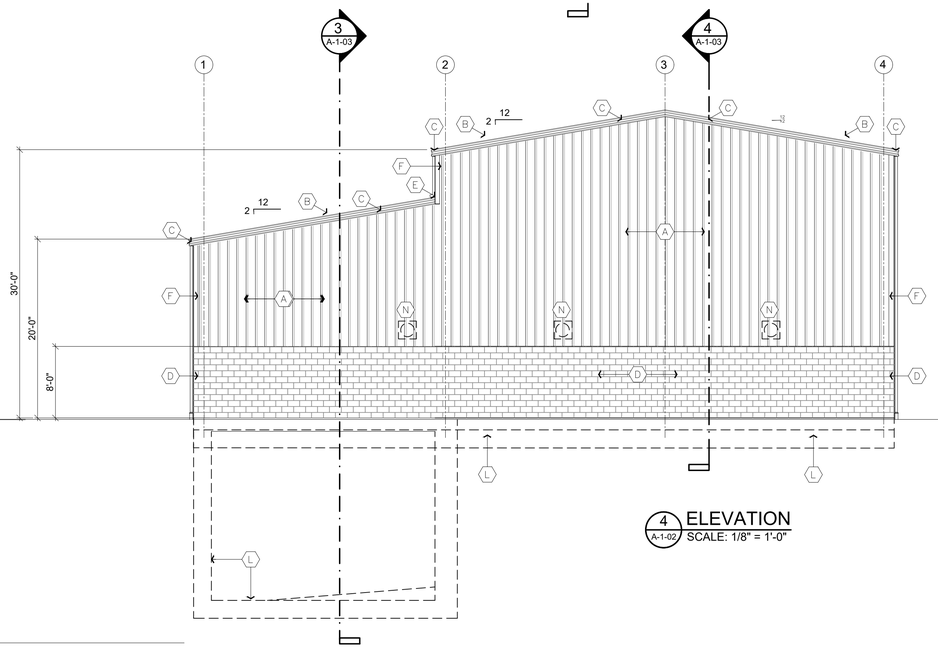

4 ELEVATION
A-1-02 SCALE: 1/8" = 1'-0"

TAGGED SHEET NOTES

- A PRE-FINISHED METAL WALL PANELS (24 GA.), SUPPLIED BY PEMB MANUFACTURER
- B PRE-FINISHED METAL ROOF PANELS (26 GA.), SUPPLIED BY PEMB MANUFACTURER
- C PRE-FINISHED METAL TRIM, GUTTERS, DOWNSPOUTS, ETC., SUPPLIED BY PEMB MANUFACTURER
- D 8" CMU WALL. SEE STRUCTURAL FOR REINFORCING
- E PRE-FINISHED METAL WALL FLASHING AT PEMB WALL PANEL-TO-LOW ROOF JUNCTURE
- F PRE-FINISHED METAL TRIM AT ALL EXTERIOR CORNERS
- G PRE-FINISHED METAL TRIM AT WALL-SOFFIT/CLG JUNCTURE
- H PRE-FINISHED METAL LINER PANEL
- J INSULATION SUPPLIED BY PEMB MANUFACTURER R-30 ROOF; R-19 WALLS
- K HOLLOW METAL DOOR AND DOOR FRAME (GALVANIZED AND PAINTED)
- L CONCRETE FLOOR SLAB/FOUNDATION WALLS AND FOOTINGS - SEE STRUCTURAL DRAWINGS
- M OVERHEAD DOOR
- N MECHANICAL EQUIPMENT. SEE DWG H-1 FOR SCHEDULE AND H-2 FOR PLAN

IT IS A VIOLATION OF LAW FOR ANY PERSON TO ALTER THIS DRAWING WITHOUT WRITTEN PERMISSION FROM KENTUCKY ENGINEERING GROUP, PLLC AND ACTING UNDER THE DIRECTION OF A LICENSED ENGINEER.

THIS DRAWING WAS PREPARED AT THE SCALE INDICATED. INACCURACIES IN THE STATED SCALE MAY BE INTRODUCED WHEN DRAWINGS ARE REPRODUCED BY ANY MEANS. USE THE GRAPHIC SCALE BAR IN THE DRAWING OR TITLE BLOCK TO DETERMINE THE ACTUAL SCALE.

NO.	DATE	REVISIONS	BY

DATE:	FEB 2026
PROJECT MGR:	RCC
DRAWN BY:	JBE
CHECKED BY:	JBE/RCC
SCALE:	AS NOTED

2025 © Kentucky Engineering Group, PLLC

P.O. Box 1034
VERSAILLES, KENTUCKY 40383
KENTUCKY ENGINEERING GROUP, PLLC

WATER TREATMENT PLANT
GAC FACILITY
FOR THE
CITY OF CYNTHIANA

GAC FACILITY BUILDING
BUILDING ELEVTIONS

JOSEPH B. EARLY
REGISTERED NO 3898
PROFESSIONAL
STATE OF KENTUCKY
ARCHITECT

PROJECT NO.
25009

SHEET NO.
A-1-02

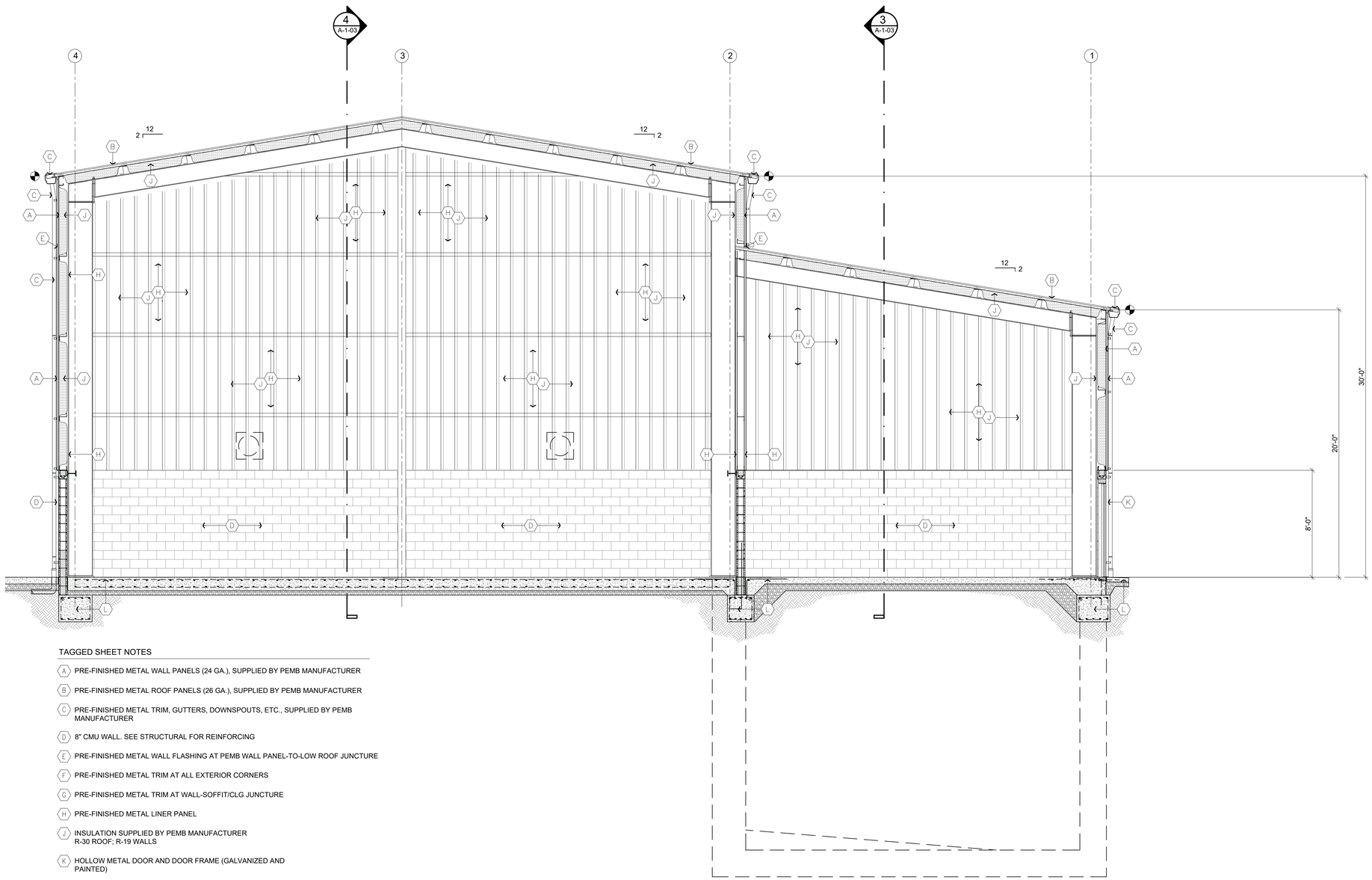

TAGGED SHEET NOTES

- (A) PRE-FINISHED METAL WALL PANELS (24 GA.), SUPPLIED BY PEMB MANUFACTURER
- (B) PRE-FINISHED METAL ROOF PANELS (26 GA.), SUPPLIED BY PEMB MANUFACTURER
- (C) PRE-FINISHED METAL TRIM, GUTTERS, DOWNSPOUTS, ETC., SUPPLIED BY PEMB MANUFACTURER
- (D) 8" CMU WALL. SEE STRUCTURAL FOR REINFORCING
- (E) PRE-FINISHED METAL WALL FLASHING AT PEMB WALL PANEL-TO-LOW ROOF JUNCTURE
- (F) PRE-FINISHED METAL TRIM AT ALL EXTERIOR CORNERS
- (G) PRE-FINISHED METAL TRIM AT WALL-SOFFIT/CLG JUNCTURE
- (H) PRE-FINISHED METAL LINER PANEL
- (J) INSULATION SUPPLIED BY PEMB MANUFACTURER R-30 ROOF; R-19 WALLS
- (K) HOLLOW METAL DOOR AND DOOR FRAME (GALVANIZED AND PAINTED)
- (L) CONCRETE FLOOR SLAB/FOUNDATION WALLS AND FOOTINGS - SEE STRUCTURAL DRAWINGS
- (M) OVERHEAD DOOR
- (N) MECHANICAL EQUIPMENT. SEE DWG H-1 FOR SCHEDULE AND H-2 FOR PLAN

1 A-1-03 BUILDING SECTION
SCALE: 1/4" = 1'-0"

IT IS A VIOLATION OF LAW FOR ANY PERSON TO ALTER THIS DRAWING WITHOUT WRITTEN PERMISSION FROM KENTUCKY ENGINEERING GROUP, PLLC AND ACTING UNDER THE DIRECTION OF A LICENSED ENGINEER.

THIS DRAWING WAS PREPARED AT THE SCALE INDICATED. INACCURACIES IN THE STATED SCALE MAY BE INTRODUCED WHEN DRAWINGS ARE REPRODUCED BY ANY MEANS. USE THE GRAPHIC SCALE BAR IN THE DRAWING OR TITLE BLOCK TO DETERMINE THE ACTUAL SCALE.

NO.	DATE	REVISIONS	BY

DATE:	FEB 2026
PROJECT MGR:	RCC
DRAWN BY:	JBE
CHECKED BY:	JBE/RCC
SCALE:	AS NOTED

2025 © Kentucky Engineering Group, PLLC

P.O. Box 1034
VERSAILLES, KENTUCKY 40383
KENTUCKY ENGINEERING GROUP, PLLC

WATER TREATMENT PLANT
GAC FACILITY
FOR THE
CITY OF CYNTHIANA

GAC FACILITY BUILDING
BUILDING SECTION

JOSEPH B. EARLY
REGISTERED
NO. 3898
COMMONWEALTH OF KENTUCKY
ARCHITECT

PROJECT NO.
25009

SHEET NO.
A-1-03.1

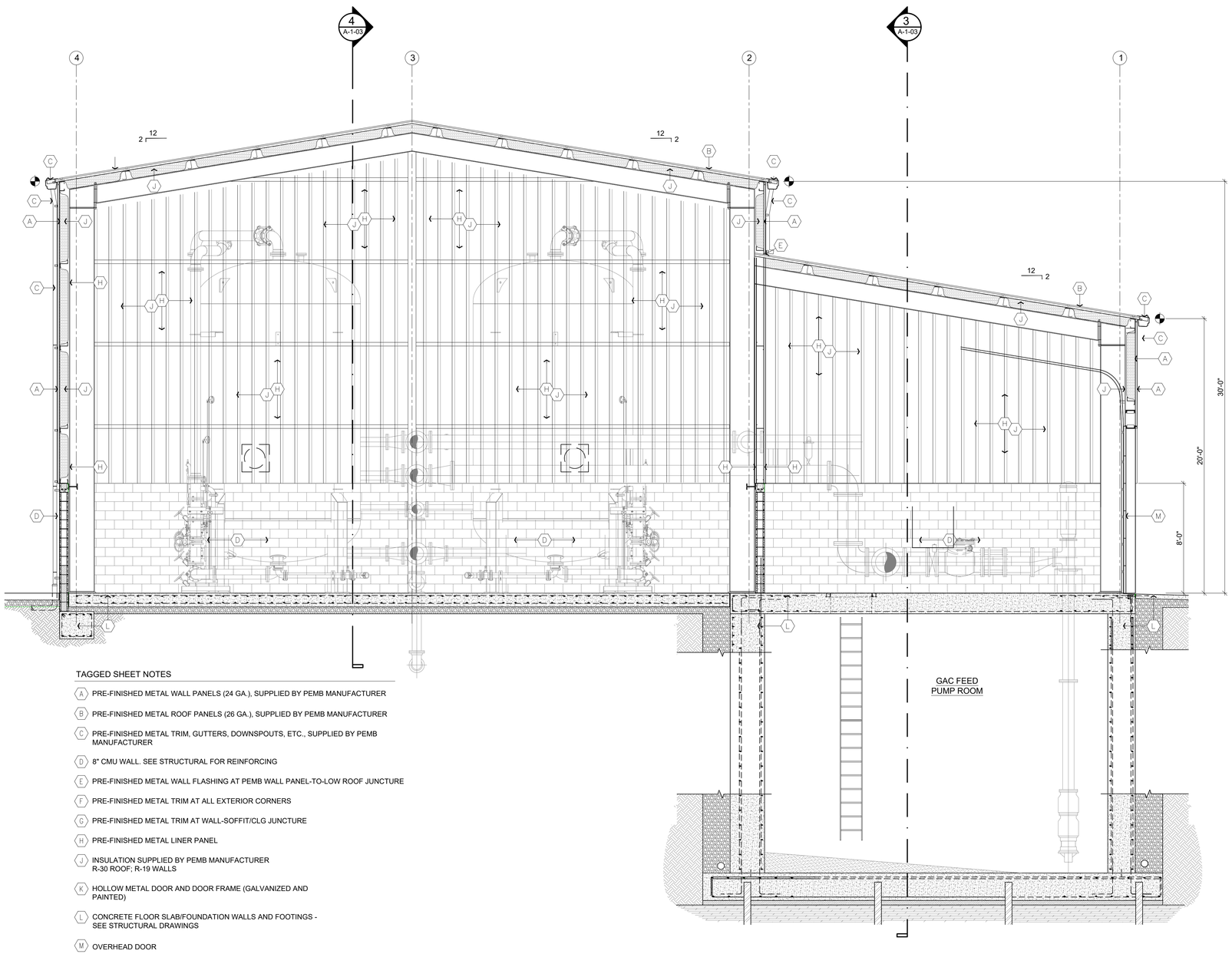

TAGGED SHEET NOTES

- (A) PRE-FINISHED METAL WALL PANELS (24 GA.), SUPPLIED BY PEMB MANUFACTURER
- (B) PRE-FINISHED METAL ROOF PANELS (26 GA.), SUPPLIED BY PEMB MANUFACTURER
- (C) PRE-FINISHED METAL TRIM, GUTTERS, DOWNSPOUTS, ETC., SUPPLIED BY PEMB MANUFACTURER
- (D) 8" CMU WALL. SEE STRUCTURAL FOR REINFORCING
- (E) PRE-FINISHED METAL WALL FLASHING AT PEMB WALL PANEL-TO-LOW ROOF JUNCTURE
- (F) PRE-FINISHED METAL TRIM AT ALL EXTERIOR CORNERS
- (G) PRE-FINISHED METAL TRIM AT WALL-SOFFIT/CLG JUNCTURE
- (H) PRE-FINISHED METAL LINER PANEL
- (J) INSULATION SUPPLIED BY PEMB MANUFACTURER R-30 ROOF; R-19 WALLS
- (K) HOLLOW METAL DOOR AND DOOR FRAME (GALVANIZED AND PAINTED)
- (L) CONCRETE FLOOR SLAB/FOUNDATION WALLS AND FOOTINGS - SEE STRUCTURAL DRAWINGS
- (M) OVERHEAD DOOR
- (N) MECHANICAL EQUIPMENT. SEE DWG H-1 FOR SCHEDULE AND H-2 FOR PLAN

2 BUILDING SECTION
A-1-03 SCALE: 1/4" = 1'-0"

IT IS A VIOLATION OF LAW FOR ANY PERSON TO ALTER THIS DRAWING WITHOUT WRITTEN PERMISSION FROM KENTUCKY ENGINEERING GROUP, PLLC AND ACTING UNDER THE DIRECTION OF A LICENSED ENGINEER.

THIS DRAWING WAS PREPARED AT THE SCALE INDICATED. INACCURACIES IN THE STATED SCALE MAY BE INTRODUCED WHEN DRAWINGS ARE REPRODUCED BY ANY MEANS. USE THE GRAPHIC SCALE BAR IN THE DRAWING OR TITLE BLOCK TO DETERMINE THE ACTUAL SCALE.

NO.	DATE	REVISIONS	BY

DATE:	FEB 2026
PROJECT MGR:	RCC
DRAWN BY:	JBE
CHECKED BY:	JBE/RCC
SCALE:	AS NOTED

2025 © Kentucky Engineering Group, PLLC

P.O. Box 1034
VERSAILLES, KENTUCKY 40383
KENTUCKY ENGINEERING GROUP, PLLC

WATER TREATMENT PLANT
GAC FACILITY
FOR THE
CITY OF CYNTHIANA

GAC FACILITY BUILDING BUILDING SECTION

JOSEPH B. EARLY REGISTERED NO. 32911 STATE OF KENTUCKY ARCHITECT

PROJECT NO. 25009

SHEET NO. A-1-03.2

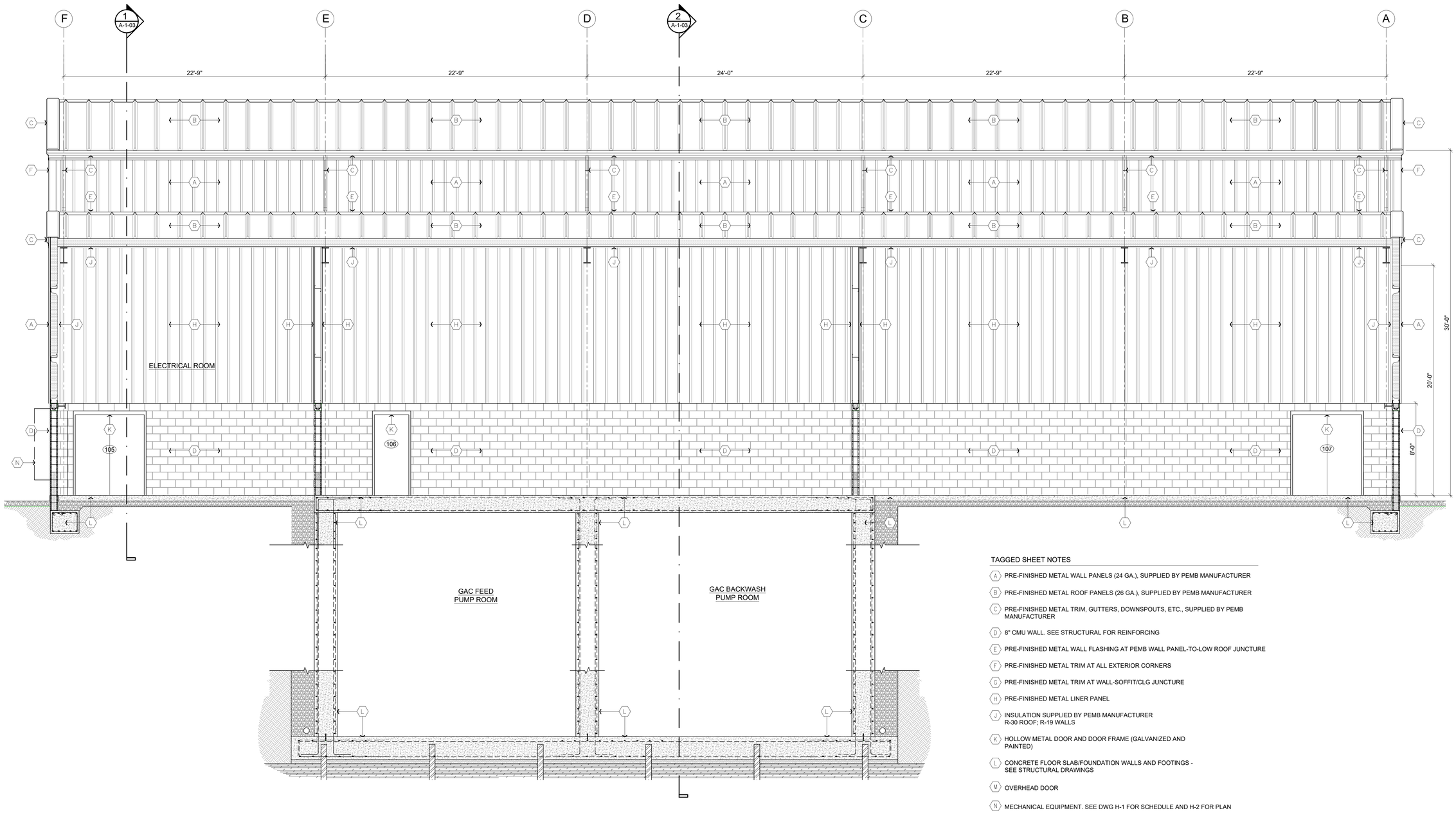

TAGGED SHEET NOTES

- (A) PRE-FINISHED METAL WALL PANELS (24 GA.), SUPPLIED BY PEMB MANUFACTURER
- (B) PRE-FINISHED METAL ROOF PANELS (26 GA.), SUPPLIED BY PEMB MANUFACTURER
- (C) PRE-FINISHED METAL TRIM, GUTTERS, DOWNSPOUTS, ETC., SUPPLIED BY PEMB MANUFACTURER
- (D) 8" CMU WALL. SEE STRUCTURAL FOR REINFORCING
- (E) PRE-FINISHED METAL WALL FLASHING AT PEMB WALL PANEL-TO-LOW ROOF JUNCTURE
- (F) PRE-FINISHED METAL TRIM AT ALL EXTERIOR CORNERS
- (G) PRE-FINISHED METAL TRIM AT WALL-SOFFIT/CLG JUNCTURE
- (H) PRE-FINISHED METAL LINER PANEL
- (J) INSULATION SUPPLIED BY PEMB MANUFACTURER R-30 ROOF; R-19 WALLS
- (K) HOLLOW METAL DOOR AND DOOR FRAME (GALVANIZED AND PAINTED)
- (L) CONCRETE FLOOR SLAB/FOUNDATION WALLS AND FOOTINGS - SEE STRUCTURAL DRAWINGS
- (M) OVERHEAD DOOR
- (N) MECHANICAL EQUIPMENT. SEE DWG H-1 FOR SCHEDULE AND H-2 FOR PLAN

3 A-1-03 BUILDING SECTION
SCALE: 1/4" = 1'-0"

IT IS A VIOLATION OF LAW FOR ANY PERSON TO ALTER THIS DRAWING WITHOUT WRITTEN PERMISSION FROM KENTUCKY ENGINEERING GROUP, PLLC AND ACTING UNDER THE DIRECTION OF A LICENSED ENGINEER.

THIS DRAWING WAS PREPARED AT THE SCALE INDICATED. INACCURACIES IN THE STATED SCALE MAY BE INTRODUCED WHEN DRAWINGS ARE REPRODUCED BY ANY MEANS. USE THE GRAPHIC SCALE BAR IN THE DRAWING OR TITLE BLOCK TO DETERMINE THE ACTUAL SCALE.

NO.	DATE	REVISIONS	BY

DATE:	FEB 2026
PROJECT MGR:	RCC
DRAWN BY:	JBE
CHECKED BY:	JBE/RCC
SCALE:	AS NOTED

2025 © Kentucky Engineering Group, PLLC

P.O. Box 1034
VERSAILLES, KENTUCKY 40383
KENTUCKY ENGINEERING GROUP, PLLC

WATER TREATMENT PLANT
GAC FACILITY
FOR THE
CITY OF CYNTHIANA

GAC FACILITY BUILDING
BUILDING SECTION

JOSEPH B. EARLY
REGISTERED NO. 3898
COMMONWEALTH OF KENTUCKY
ARCHITECT

PROJECT NO.
25009

SHEET NO.
A-1-03.3

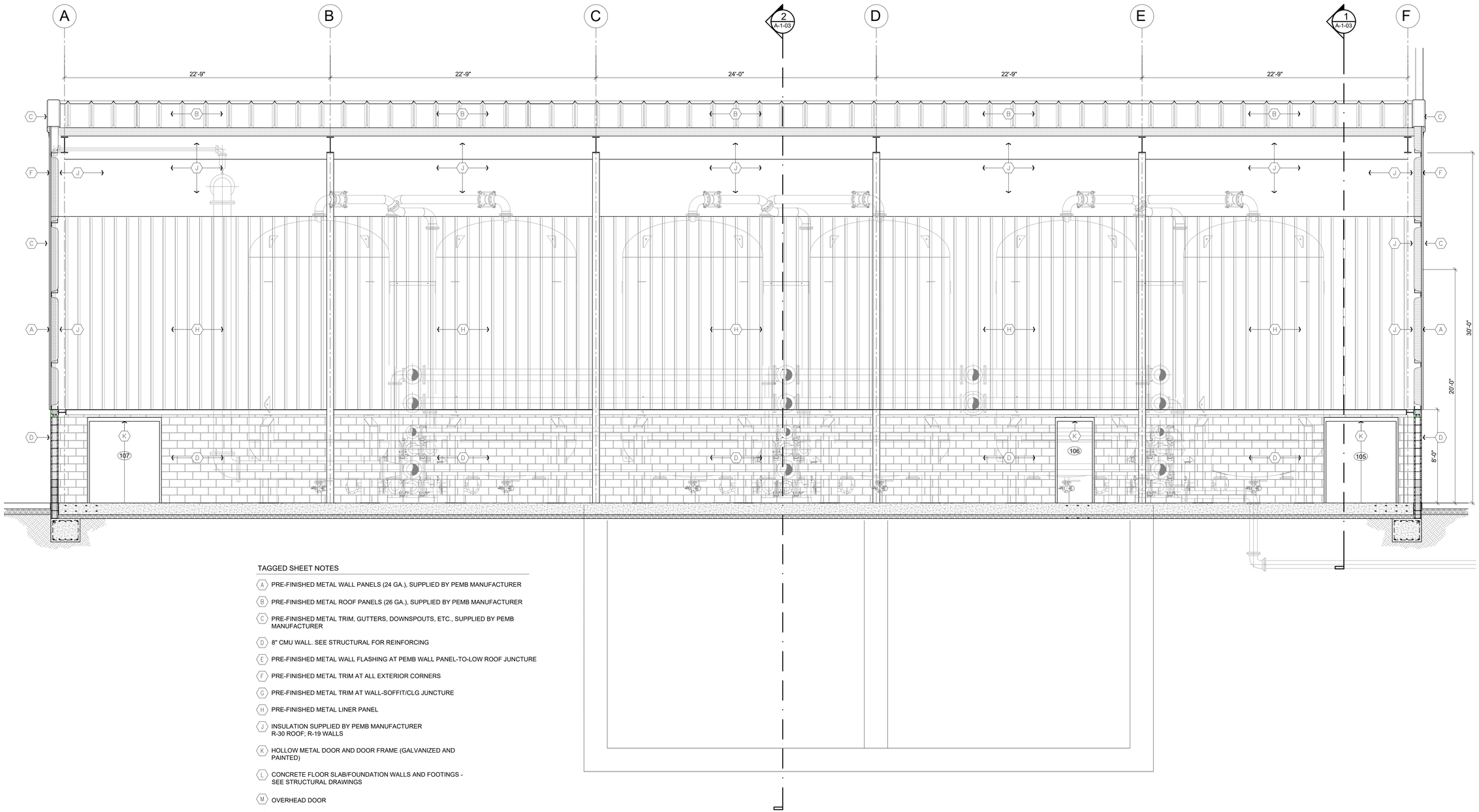

TAGGED SHEET NOTES

- (A) PRE-FINISHED METAL WALL PANELS (24 GA.), SUPPLIED BY PEMB MANUFACTURER
- (B) PRE-FINISHED METAL ROOF PANELS (26 GA.), SUPPLIED BY PEMB MANUFACTURER
- (C) PRE-FINISHED METAL TRIM, GUTTERS, DOWNSPOUTS, ETC., SUPPLIED BY PEMB MANUFACTURER
- (D) 8" CMU WALL. SEE STRUCTURAL FOR REINFORCING
- (E) PRE-FINISHED METAL WALL FLASHING AT PEMB WALL PANEL-TO-LOW ROOF JUNCTURE
- (F) PRE-FINISHED METAL TRIM AT ALL EXTERIOR CORNERS
- (G) PRE-FINISHED METAL TRIM AT WALL-SOFFIT/CLG JUNCTURE
- (H) PRE-FINISHED METAL LINER PANEL
- (J) INSULATION SUPPLIED BY PEMB MANUFACTURER R-30 ROOF; R-19 WALLS
- (K) HOLLOW METAL DOOR AND DOOR FRAME (GALVANIZED AND PAINTED)
- (L) CONCRETE FLOOR SLAB/FOUNDATION WALLS AND FOOTINGS - SEE STRUCTURAL DRAWINGS
- (M) OVERHEAD DOOR
- (N) MECHANICAL EQUIPMENT. SEE DWG H-1 FOR SCHEDULE AND H-2 FOR PLAN

4 A-1-03 BUILDING SECTION
SCALE: 1/4" = 1'-0"

IT IS A VIOLATION OF LAW FOR ANY PERSON TO ALTER THIS DRAWING WITHOUT WRITTEN PERMISSION FROM KENTUCKY ENGINEERING GROUP, PLLC AND ACTING UNDER THE DIRECTION OF A LICENSED ENGINEER.

THIS DRAWING WAS PREPARED AT THE SCALE INDICATED. INACCURACIES IN THE STATED SCALE MAY BE INTRODUCED WHEN DRAWINGS ARE REPRODUCED BY ANY MEANS. USE THE GRAPHIC SCALE BAR IN THE DRAWING OR TITLE BLOCK TO DETERMINE THE ACTUAL SCALE.

NO.	DATE	REVISIONS	BY

DATE:	FEB 2026
PROJECT MGR:	RCC
DRAWN BY:	JBE
CHECKED BY:	JBE/RCC
SCALE:	AS NOTED

2025 © Kentucky Engineering Group, PLLC

P.O. Box 1034
VERSAILLES, KENTUCKY 40383
KENTUCKY ENGINEERING GROUP, PLLC

WATER TREATMENT PLANT
GAC FACILITY
FOR THE
CITY OF CYNTHIANA

GAC FACILITY BUILDING
BUILDING SECTION

JOSEPH B. EARLY
REGISTERED NO. 3898
PROFESSIONAL ENGINEER
OF KENTUCKY
ARCHITECT

PROJECT NO.
25009

SHEET NO.
A-1-03.4

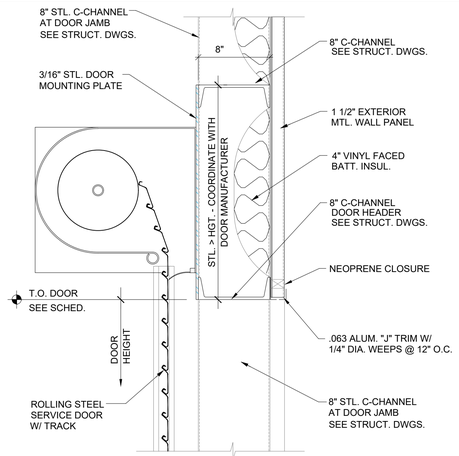

A A-1-04 HEAD DETAIL
SCALE: 1-1/2" = 1'-0"

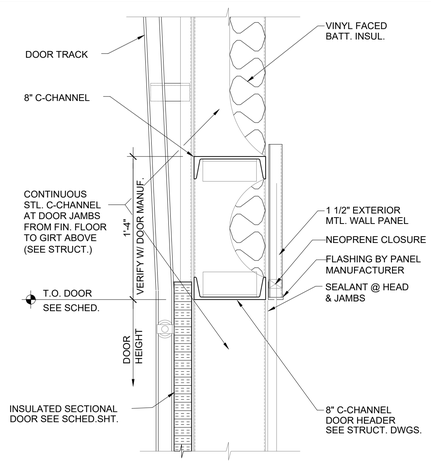

B A-1-04 HEAD DETAIL
SCALE: 1-1/2" = 1'-0"

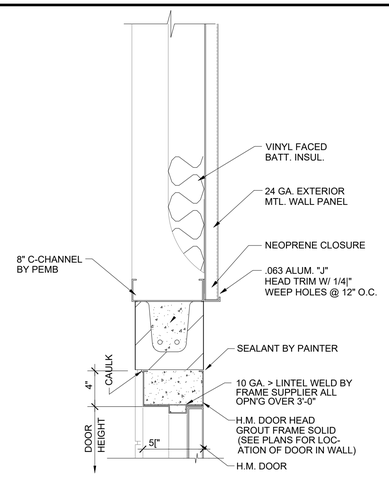

C A-1-04 HEAD DETAIL
SCALE: 1-1/2" = 1'-0"

DOOR SCHEDULE

LEGEND
ALUM. = ALUMINUM
H.M. = HOLLOW METAL
I.D. = IMPACT DOOR
MTL. = METAL
STL. = STEEL
WD. = WOOD

TYPE MARK	DOOR SIZE WIDTH	DOOR SIZE HGT.	DOOR SIZE THK.	DOOR MAT'L.	DOOR TYPE	DOOR TEMP. GLASS	FRAME MAT'L.	FRAME TYPE	HEAD DETAIL	JAMB DETAIL	SILL DETAIL	DEPTH	U.L. LABEL	HARD-WARE SET NO.	REMARKS
101	6'-0"	7'-0"	1 3/4"	H.M.	1	"	H.M.	B	C	F	–	5 3/4"	"		GALVANIZED DOOR AND FRAME
102	3'-0"	7'-0"	1 3/4"	H.M.	1	"	H.M.	B	C	F	–	5 3/4"	"		GALVANIZED DOOR AND FRAME
103	3'-0"	7'-0"	1 3/4"	H.M.	1	"	H.M.	B	C	F	–	5 3/4"	"		GALVANIZED DOOR AND FRAME
104	3'-0"	7'-0"	1 3/4"	H.M.	1	"	H.M.	B	C	F	–	5 3/4"	–		GALVANIZED DOOR AND FRAME
105	6'-0"	7'-0"	1 3/4"	H.M.	1	"	H.M.	B	C	F	–	5 3/4"	–		GALVANIZED DOOR AND FRAME
106	3'-0"	7'-0"	1 3/4"	H.M.	1	"	H.M.	B	C	F	–	5 3/4"	–		GALVANIZED DOOR AND FRAME
107	6'-0"	7'-0"	1 3/4"	H.M.	1	"	H.M.	B	C	F	–	5 3/4"	–		GALVANIZED DOOR AND FRAME
OH1	10'-0"	12'-0"	1 3/4"	STL.	3	"	METAL	"	A / B	D / E					GALVANIZED DOOR AND FRAME, MANUAL OPERATION
OH2	10'-0"	12'-0"	1 3/4"	STL.	3	"	METAL	"	A / B	D / E					GALVANIZED DOOR AND FRAME, MANUAL OPERATION
OH3	10'-0"	12'-0"	1 3/4"	STL.	3	"	METAL	"	A / B	D / E					GALVANIZED DOOR AND FRAME, MANUAL OPERATION

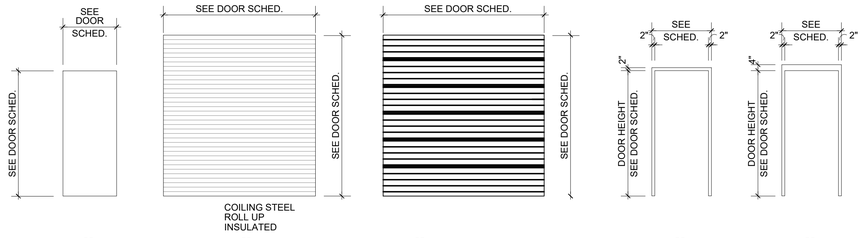

1 2 3 SECTIONAL DECK DOOR A B

DOOR & DOOR FRAME ELEVATIONS
SCALE: 1/4" = 1'-0"

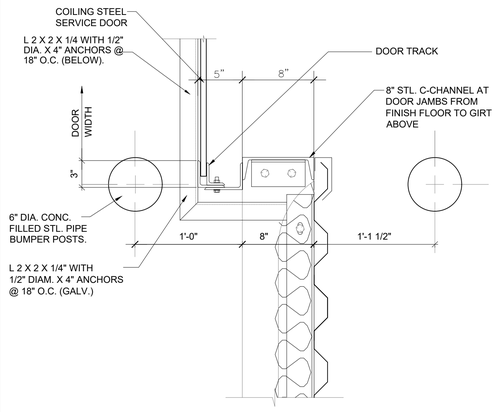

D1 A-1-04 UPPER JAMB DETAIL
SCALE: 1-1/2" = 1'-0"

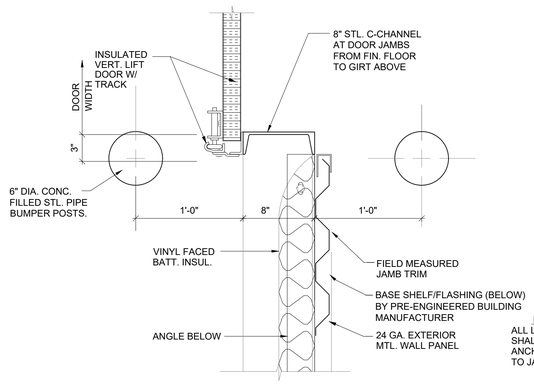

E1 A-1-04 UPPER JAMB DETAIL
SCALE: 1-1/2" = 1'-0"

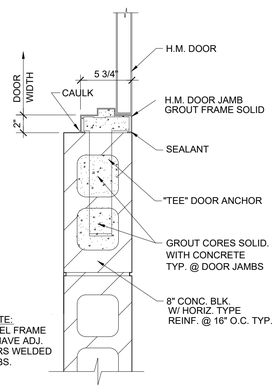

NOTE:
ALL LABEL FRAME SHALL HAVE ADJ. ANCHORS WELDED TO JAMBS.

F A-1-04 JAMB DETAIL
SCALE: 1-1/2" = 1'-0"

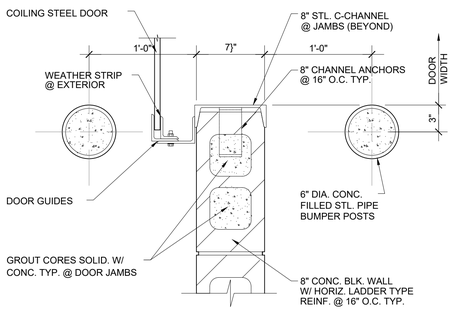

D2 A-1-04 LOWER JAMB DETAIL
SCALE: 1-1/2" = 1'-0"

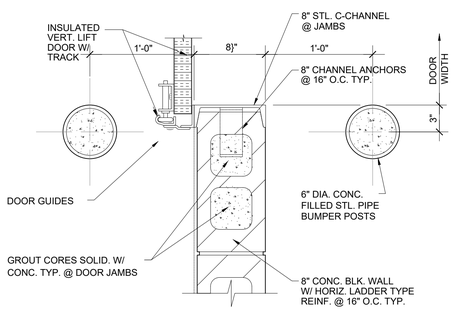

E2 A-1-04 LOWER JAMB DETAIL
SCALE: 1-1/2" = 1'-0"

IT IS A VIOLATION OF LAW FOR ANY PERSON TO ALTER THIS DRAWING WITHOUT WRITTEN PERMISSION FROM KENTUCKY ENGINEERING GROUP, PLLC AND ACTING UNDER THE DIRECTION OF A LICENSED ENGINEER.

THIS DRAWING WAS PREPARED AT THE SCALE INDICATED. INACCURACIES IN THE STATED SCALE MAY BE INTRODUCED WHEN DRAWINGS ARE REPRODUCED BY ANY MEANS. USE THE GRAPHIC SCALE BAR IN THE DRAWING OR TITLE BLOCK TO DETERMINE THE ACTUAL SCALE.

NO.	DATE	REVISIONS	BY

DATE:	FEB 2026
PROJECT MGR:	RCC
DRAWN BY:	JBE
CHECKED BY:	JBE/RCC
SCALE:	AS NOTED

2025 © Kentucky Engineering Group, PLLC

P.O. Box 1034
VERSAILLES, KENTUCKY 40383
KENTUCKY ENGINEERING GROUP, PLLC

WATER TREATMENT PLANT
GAC FACILITY
FOR THE
CITY OF CYNTHIANA

GAC FACILITY BUILDING DOOR SCHEDULE & DETAILS

JOSEPH B. EARLY REGISTERED NO. 29 LICENSED KENTUCKY ARCHITECT

PROJECT NO. 25009

SHEET NO. A-1-04

STRUCTURAL GENERAL NOTES

DESIGN LOADS

STRUCTURAL RISK CATEGORY ..... CATEGORY III

FLOOR LIVE LOAD
HEAVY MANUFACTURING ..... 250 PSF

CONCENTRATED FLOOR LIVE LOAD

CONCENTRATED FLOOR LIVE LOADS SHALL BE UNIFORMLY DISTRIBUTED OVER A MINIMUM AREA OF 2.5 FEET BY 2.5 FEET AND SHALL BE NON-CONCURRENT WITH THE OVERALL UNIFORM FLOOR LIVE LOAD.

HEAVY MANUFACTURING ..... 3,000 LBS

ROOF LIVE LOAD ..... 20 PSF MIN

ROOF SNOW LOAD (PER ASCE 7-10)
GROUND SNOW LOAD ..... P_g = 15 PSF
IMPORTANCE FACTOR ..... I_s = 1.10
SNOW EXPOSURE FACTOR ..... C_e = 0.9
THERMAL FACTOR
(BUILDING) ..... C_t = 1.0
FLAT-ROOF SNOW LOAD* ($P_f = 0.7 C_e C_t I_s P_g$)
(BUILDING) ..... P_f = 10.5 PSF
MINIMUM-ROOF SNOW LOAD ($I_s P_g$) ..... P_m = 16.5 PSF
SLOPED-ROOF SNOW LOAD* ($P_s = C_s P_f$)
(BUILDING) ..... P_s = 10.5 PSF
*(INCREASE FOR DRIFTING PER ASCE 7-10, SECTIONS 7.7 & 7.8)
MAXIMUM SNOW DRIFT HEIGHT ..... h_d = 2.05 FT
MAXIMUM SNOW DRIFT MAGNITUDE ($P_d = hd*\gamma$) ..... P_d = 32.7 PSF
MAXIMUM SNOW DRIFT WIDTH ..... w = 8.2 FT

WIND LOAD (PER ASCE 7-10)
ULTIMATE DESIGN WIND SPEED ..... V_{ULT} = 120 MPH
NOMINAL DESIGN WIND SPEED ..... V_{ASD} = 93 MPH
WIND EXPOSURE ..... EXPOSURE C
ENCLOSURE ..... FULLY ENCLOSED
INTERNAL PRESSURE COEFFICIENT ..... GC_{pi} = ± 0.18
END ZONE WIDTH ..... a = 7.9 FT

COMPONENTS & CLADDING EXTERNAL PRESSURE ULTIMATE (LRFD) LOADS (PSF)

EFFECTIVE WIND AREA (SQ FT)	LOCATION PER ASCE 7-10:				
	(1)	(2)	(3)	(4)	(5)
≤10	14.7 -36.2	14.7 -60.8	14.7 -91.5	33.2 -35.9	33.2 -44.2
20	13.8 -35.3	13.8 -54.3	13.8 -75.8	31.7 -34.5	31.7 -41.3
50	12.6 -34.1	12.6 -45.8	12.6 -55.0	29.8 -32.5	29.8 -37.4
100	11.7 -33.2	11.7 -39.3	11.7 -39.3	28.3 -31.0	28.3 -34.5
500	↓	↓	↓	24.9 -27.6	24.9 -27.6

NOTES:
1. WIND LOADING PROVIDED ARE ULTIMATE (LRFD) LOADING. FOR ALLOWABLE STRESS DESIGN MULTIPLY LOADS PROVIDED BY 0.6.
2. LOADING PROVIDED IS FOR WORST CASE ROOF HEIGHT. DELEGATED DESIGNERS MAY RECALCULATE LOADS FOR SPECIFIC COMPONENT HEIGHTS USING PARAMETERS SPECIFIED.
3. PRESSURES SHOWN ARE APPLIED NORMAL TO THE SURFACE.
4. PLUS AND MINUS SIGNS SIGNIFY PRESSURES ACTING TOWARD AND AWAY FROM THE SURFACES, RESPECTIVELY.
5. FOR HIP ROOFS WITH $\theta \leq 25°$, ZONE 3 SHALL BE TREATED AS ZONE 2.
6. EACH COMPONENT MUST BE DESIGNED FOR MAXIMUM POSITIVE AND NEGATIVE FORCES.
7. FOR COMPONENTS HAVING EFFECTIVE AREAS IN BETWEEN TABULATED VALUES, DESIGN LOADS MAY BE INTERPOLATED. OTHERWISE DESIGN LOAD MUST BE TAKEN FROM THE NEXT LOWEST EFFECTIVE AREA.
8. INTERNAL PRESSURE FOR ENCLOSED BUILDING IS INCLUDED IN ABOVE VALUES.
9. THE NET C&C PRESSURE (INCLUDING INTERNAL PRESSURE) FOR ANY COMPONENT SHALL NOT BE TAKEN LESS THAN 16 PSF ACTING IN EITHER DIRECTION NORMAL TO THE SURFACE.
10. NOTATION:
a: 10 PERCENT OF LEAST HORIZONTAL DIMENSION OR 0.4h, WHICHEVER IS SMALLER, BUT NOT LESS THAN EITHER 4% OF LEAST HORIZONTAL DIMENSION OR 3 FT.
h: MEAN ROOF HEIGHT, IN FEET, EXCEPT THAT EAVE HEIGHT SHALL BE USED FOR ROOF ANGLES $\theta < 10°$
θ: ANGLE OF PLANE OF ROOF FROM HORIZONTAL, IN DEGREES.

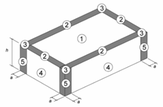

NEAR - FLAT ROOF (θ ≤ 7°)

EARTHQUAKE DESIGN DATA
COUNTY / STATE ..... HARRISON / KENTUCKY
IMPORTANCE FACTOR ..... I_e = 1.25
MAPPED SHORT PERIOD RESPONSE ACCELERATION ..... S_s = 0.188
MAPPED 1 SECOND PERIOD RESPONSE ACCELERATION ..... S_1 = 0.087
BUILDING:
SITE CLASS ..... CLASS A
DESIGN SHORT PERIOD SPECTRAL RESPONSE COEFFICIENT ..... S_{DS} = 0.101
DESIGN 1 SECOND PERIOD SPECTRAL RESPONSE COEFFICIENT ..... S_{D1} = 0.047
SEISMIC DESIGN CATEGORY ..... CATEGORY A
BASIC STRUCTURAL SYSTEM ..... SEE PEMB MANUFACTURER
SEISMIC RESISTING SYSTEM ..... SEE PEMB MANUFACTURER
RESPONSE MODIFICATION FACTOR ..... SEE PEMB MANUFACTURER
SEISMIC RESPONSE COEFFICIENT ..... SEE PEMB MANUFACTURER
METHOD OF ANALYSIS ..... SEE PEMB MANUFACTURER
SEISMIC BASE SHEAR ..... SEE PEMB MANUFACTURER
GAC TANK SLAB:
SITE CLASS ..... CLASS D
DESIGN SHORT PERIOD SPECTRAL RESPONSE COEFFICIENT ..... S_{DS} = 0.201
DESIGN 1 SECOND PERIOD SPECTRAL RESPONSE COEFFICIENT ..... S_{D1} = 0.140
SEISMIC DESIGN CATEGORY ..... CATEGORY C
SEISMIC RESISTING SYSTEM ..... ELEVATED TANKS ON UNBRACED LEGS
RESPONSE MODIFICATION FACTOR ..... R = 2.0
SEISMIC RESPONSE COEFFICIENT ..... C_s = 0.126
METHOD OF ANALYSIS ..... EQUIVALENT LATERAL FORCE PROCEDURE
SEISMIC BASE SHEAR= ..... 0.126W KIPS

FLOOD LOAD

BASE FLOOD ELEVATION 716.8 FEET PER FIRMETTE 21097C0168D EFFECTIVE 2/28/2025
FLOOD DESIGN CLASS 3 PER ASCE24.
BUILDING IS PROTECTED VIA A PRIVATE LEVEE. SEE CIVIL/SITE DWGS.

DESIGN STRESSES

CONCRETE (STRENGTH DESIGN) MINIMUM COMPRESSIVE STRENGTH IN 28 DAYS:
INTERIOR SLABS ON GRADE, GRADE BEAMS, AND WALLS ..... f'_c = 4,000 PSI
CONCRETE EXTERIOR WALLS AND PIERS ..... f'_c = 4,500 PSI
STRUCTURAL CONCRETE EXPOSED TO FREEZE/THAW ..... f'_c = 5,000 PSI
REINFORCING BARS (ASTM A615 GRADE 60) ..... f_y = 60,000 PSI
WELDED WIRE FABRIC (ASTM A1064) ..... f_y = 65,000 PSI
MASONRY ASSEMBLY COMPRESSIVE STRENGTH ..... f'_m = 2,000 PSI
CONCRETE MASONRY UNIT STRENGTH ..... f'_m = 2,000 PSI
TYPE S MORTAR STRENGTH ..... f'_m = 2,000 PSI
MASONRY GROUT (ASTM C476) MINIMUM COMPRESSIVE
STRENGTH IN 28 DAYS ..... f'_m = 2,000 PSI
SOIL BEARING PRESSURE FOR FOUNDATIONS (MATERIAL) ..... 1,500 PSF
SOIL BEARING PRESSURE FOR FOUNDATIONS (IMPROVED W/ RAP) ..... 3,000 PSF
ROCK BEARING PRESSURE FOR FOUNDATIONS ..... 25,000 PSF

DESIGN CRITERIA

1. STRUCTURE IS DESIGNED IN ACCORDANCE WITH THE 2018 KENTUCKY BUILDING CODE, 4TH EDITION (2015 IBC).
2. MAXIMUM ESTIMATED DEFLECTIONS (IN INCHES) ARE AS FOLLOWS.

	LIVE LOAD	DEAD + LIVE LOAD
ROOF MEMBERS	L/360	L/240
FLOOR MEMBERS INTERIOR	L/360	L/240
FLOOR MEMBERS SPANDREL	L/480	L/360

WHERE L = SPAN LENGTH BETWEEN CENTERLINE OF SUPPORTS (INCHES)
FOR CANTILEVERS L = TWICE THE LENGTH OF THE CANTILEVER
3. NO PROVISION HAS BEEN MADE FOR FUTURE HORIZONTAL OR VERTICAL EXPANSION.

GENERAL

1. THE REQUIREMENTS OF THESE GENERAL NOTES APPLY UNLESS NOTED OTHERWISE ON PLANS OR IN SPECIFICATIONS.
2. THE CONTRACTOR SHALL BE RESPONSIBLE FOR OBTAINING ALL CONTRACT DOCUMENTS, ADDENDA, AND SUPPLEMENTARY INFORMATION AND DISTRIBUTING SUCH TO ALL SUBCONTRACTORS AND MATERIAL SUPPLIERS PRIOR TO THE PREPARATION AND SUBMITTAL OF SHOP DRAWINGS, FABRICATION, AND INSTALLATION OF ANY STRUCTURAL MEMBERS.
3. THE CONTRACTOR SHALL VERIFY ALL DIMENSIONS IN THE FIELD PRIOR TO COMMENCING WORK. THE ENGINEER SHALL BE NOTIFIED OF ANY DISCREPANCIES THAT MAY EXIST.
4. ANY DISCREPANCIES BETWEEN STRUCTURAL AND ARCHITECTURAL DRAWINGS SHALL BE BROUGHT TO THE ATTENTION OF THE ARCHITECT AND STRUCTURAL ENGINEER.
5. DO NOT SCALE DRAWINGS.
6. THE STRUCTURE IS DESIGNED TO FUNCTION AS A UNIT UPON COMPLETION AND IS THEREFORE DEPENDENT UPON DIAPHRAGM ACTION OF THE ROOF DECK AND FLOOR SLAB AND ATTACHMENT TO THE SHEAR WALLS AND FRAMES FOR STABILITY AND FOR RESISTANCE TO WIND AND SEISMIC FORCES. THE CONTRACTOR SHALL FURNISH AND INSTALL ALL NECESSARY BRACING REQUIRED TO PROPERLY CONSTRUCT THE BUILDING UNTIL THESE ELEMENTS ARE COMPLETE AND CAPABLE OF PROVIDING THIS SUPPORT.
7. THE CONTRACTOR SHALL BE SOLELY RESPONSIBLE FOR MEANS AND METHODS TO CONSTRUCT THE STRUCTURE, INCLUDING VERIFICATION OF LOAD CAPACITY OF THE STRUCTURE. NEW OR EXISTING, TO SUPPORT CONSTRUCTION ACTIVITIES, EQUIPMENT, ETC. AND FOR LIMITING THE AMOUNT OF CONSTRUCTION LOAD IMPOSED ON THE STRUCTURAL FRAMING. CONSTRUCTION LOADS SHALL NOT EXCEED THE DESIGN CAPACITY OF THE FRAMING AT THE TIME THE LOADS ARE IMPOSED. DAMAGE TO THE STRUCTURE CAUSED BY CONSTRUCTION ACTIVITIES SHALL BE CORRECTED BY THE RESPONSIBLE CONTRACTOR AT NO ADDITIONAL COST TO THE OWNER.
8. SHOP DRAWINGS MUST BE CHECKED AND STAMPED BY THE CONTRACTOR PRIOR TO SUBMISSION.
9. NON-STRUCTURAL ELEMENTS OF THE BUILDING (ARCHITECTURAL FINISHES, MASONRY VENEER AND ASSOCIATED TIES, INSULATION, SHEATHING, DUCTWORK, PIPING, FOUNDATION/FLOOR/ROOF DRAINS, ETC.) ARE TYPICALLY NOT SHOWN ON THE STRUCTURAL DRAWINGS. WHERE NON-STRUCTURAL ELEMENTS ARE SHOWN ON THE STRUCTURAL DRAWINGS, THEY ARE SHOWN FOR REFERENCE AND DESIGN INTENT ONLY. NON-STRUCTURAL ELEMENTS SHALL BE CONSTRUCTED AS SHOWN ON THE ARCHITECTURAL, ELECTRICAL, MECHANICAL AND PLUMBING DRAWINGS.
10. ELEVATIONS SHOWN ON STRUCTURAL DRAWINGS ARE IDEALIZED ELEVATIONS BASED ON DECK THICKNESS AND SLOPES SHOWN ON DRAWINGS AND DO NOT ACCOUNT FOR BEAM OR JOIST CAMBER. IT IS THE RESPONSIBILITY OF THE CONTRACTORS TO COORDINATE ANY CAMBER OF THEIR WORK WITH OTHER TRADES AND ADJUST ELEVATIONS AS NECESSARY TO ACCOUNT FOR DEAD LOAD DEFLECTION AND THIS CAMBER.
11. WALL OPENINGS AND TERMINATIONS SHOWN ON THE STRUCTURAL DRAWINGS ARE DIAGRAMMATIC ONLY. WALL TERMINATIONS AND OPENING JAMBS, HEADS, AND SILLS SHALL BE CONSTRUCTED AS SHOWN ON THE ARCHITECTURAL DRAWINGS. WHERE VENEERS WRAP JAMBS, DETAIL AND FABRICATE LINTELS TO BEAR ON SOLID STRUCTURE. DO NOT BEAR LINTELS OR BEAMS ON VENEERS (BRICKS, SIDING, ETC.). IF THE ARCHITECTURAL DRAWINGS DO NOT INCLUDE DETAILS FOR ANY OF THESE CONDITIONS, CONSULT WITH ARCHITECT FOR DIRECTION.
12. DETAILS LABELED TYPICAL ON THESE DRAWINGS SHALL APPLY TO ALL SITUATIONS OCCURRING ON THE PROJECT THAT ARE THE SAME OR SIMILAR AND SHALL APPLY REGARDLESS OF WHETHER THEY ARE KEYED ON THE PLANS. CONSTRUCTION NOT SPECIFICALLY INDICATED BY DETAIL OR SECTION SHALL BE SIMILAR TO DETAILS SHOWN FOR SIMILAR CONDITIONS.

FOUNDATION CONSTRUCTION

1. FOUNDATIONS ON THIS PROJECT ARE DESIGNED IN ACCORDANCE WITH RECOMMENDATIONS MADE BY SOLID GROUND, CONSULTING ENGINEERS, IN THEIR REPORT DATED SEPTEMBER 16, 2025. THE GEOTECHNICAL REPORT IS PROVIDED AS REFERENCE INFORMATION AVAILABLE TO BIDDERS, BUT IS NOT PART OF THE CONTRACT DOCUMENTS. THE STRUCTURAL ENGINEER IS NOT RESPONSIBLE OR LIABLE FOR THE ACCURACY OF THE INFORMATION PRESENTED IN THE GEOTECHNICAL REPORT.
2. ELEVATIONS GIVEN ARE TO THE TOP OF FOOTINGS AND GRADE BEAMS.
3. ALL FOOTINGS SHALL BE SUPPORTED ON BEDROCK OR STRUCTURAL FLOWABLE FILL / LEAN CONCRETE PLACED OVER BEDROCK. REMOVE ALL SOIL BETWEEN PROPOSED FOUNDATION ELEVATION AND BEDROCK.
4. ALL SLABS ON GRADE SHALL BE SUPPORTED ON UNDISTURBED SOIL CAPABLE OF SUPPORTING DESIGN LOADS WITHOUT APPRECIABLE SETTLEMENT. CONTRACTOR SHALL PROBE BEARING STRATA WITH DRIVEN RODS. REMOVE SHALLOW BEDROCK AND OBSTRUCTIONS (AND OVERLYING SOIL) WITHIN **ONE FOOT BELOW SLAB SUBGRADE ELEVATION**, AND REPLACE WITH ENGINEERED SOIL OR D.G.A. BACKFILL. SLABS ON GRADE SHALL NOT BEAR ON EXISTING UNDOCUMENTED FILL MATERIAL OR EXISTING FAT CLAY. CONTRACTOR SHALL REMOVE SHALLOW FILL TO A MINIMUM OF **TWO FEET BELOW SLAB SUBGRADE ELEVATION** AND REPLACE WITH ENGINEERED SOIL OR D.G.A BACKFILL. CONTRACTOR SHALL PROOFROLL SUBGRADE TO ENSURE ADEQUACY OF SUBGRADE PRIOR TO FILLING. CONTRACTOR SHALL REMOVE FAT CLAY WITHIN **TWO FEET BELOW SLAB SUBGRADE ELEVATION** AND REPLACE WITH ENGINEERED SOIL OR D.G.A BACKFILL.
5. IN GRANULAR SOILS (SANDS AND GRAVEL) THE SOIL SHALL BE MECHANICALLY TAMPED TO A HARD SURFACE IMMEDIATELY PRIOR TO PLACING FOOTING.
6. LOCATE EXISTING UNDERGROUND UTILITIES IN AREAS OF CONSTRUCTION. COORDINATE WITH UTILITY COMPANIES FOR ANY SHUT-OFF REQUIREMENTS OF STILL-ACTIVE LINES.
7. WHEN EXCAVATIONS APPROACH THE GROUND WATER LEVEL, THE WATER LEVEL SHALL BE LOWERED BY AN ACCEPTABLE DEWATERING SYSTEM SO THAT THE WATER LEVEL IS MAINTAINED CONTINUOUSLY A MINIMUM OF 2'-0" BELOW THE EXCAVATION.
8. PROVIDE MINIMUM (2) #5 CONTINUOUS IN ALL FOOTINGS DIRECTLY UNDER MASONRY WALLS.
9. BEFORE BACKFILL, ALL WALLS MUST BE ADEQUATELY BRACED. FOR BACKFILL REQUIREMENTS, SEE SPECIFICATIONS AND/OR GEOTECHNICAL ENGINEER'S REPORT.
10. RETAINING WALLS SHALL NOT BE BACKFILLED UNTIL COMPRESSIVE STRENGTH TESTS DEMONSTRATE THAT THE CONCRETE HAS DEVELOPED 100% OF THE REQUIRED 28-DAY COMPRESSIVE STRENGTH FOR THE CLASS OF CONCRETE SPECIFIED. THE CONTRACTOR MAY ELECT TO PREPARE ADDITIONAL TEST CYLINDERS IN ORDER TO DEMONSTRATE THAT THE REQUIRED COMPRESSIVE STRENGTH PRIOR TO THE MANDATORY 28-DAY COMPRESSIVE STRENGTH TESTS. IN NO CASE SHALL WALLS BE BACKFILLED PRIOR TO SEVEN (7) DAYS FROM PLACEMENT.
11. FOR PLACEMENT AND COMPACTION OF FILL UNDER SLABS ON GRADE, SEE SPECIFICATIONS. IF NOT NOTED OTHERWISE, COMPACT ALL FILL TO 98% OF OPTIMUM LABORATORY DENSITY IN ACCORDANCE WITH ASTM D698 STANDARD PROCTOR METHOD. PLACE FILL IN 6" TO 8" LAYERS AND COMPACT WITH VIBRATORY TAMPING EQUIPMENT.
12. WHERE ELECTRICAL CONDUIT CONGREGATES BELOW ELECTRICAL ROOMS AND PANELS, CONTRACTOR SHALL HOLD DOWN SUBGRADE APPROPRIATELY FOR CONDUIT TO BE BELOW SLAB. COVER CONDUIT WITH FLOWABLE FILL (LEAN CONCRETE) TO BOTTOM OF SLAB ELEVATION.
13. SEE MICROPILE NOTES AND DETAILS FOR ADDITIONAL REQUIREMENTS.
14. SEE ARCHITECTURAL AND SITE DRAWINGS FOR CONTOUR AND LAYOUT OF SITE WALKS AND BREEZEWAYS. SLOPE EXTERIOR CONCRETE 1/8"/ FT AWAY FROM BUILDING, UNLESS NOTED OTHERWISE.
15. FOUNDATION CONCRETE SHALL BE PLACED IMMEDIATELY FOLLOWING EXCAVATION. A LEAN CONCRETE (1,500 PSI) MUD MAT SHALL BE PLACED OVER THE PREPARED BEARING MATERIALS IF EXCAVATION MUST REMAIN OPEN DURING INCLEMENT WEATHER OR FOR MORE THAN 72 HOURS.
16. CONTRACTOR SHALL EXERCISE CAUTION THAT DENSE GRADED AGGREGATE BLANKET BELOW FLOOR SLAB DOES NOT BECOME SATURATED DURING CONSTRUCTION. CONTRACTOR SHALL CAST FLOOR SLAB OR PROVIDE TEMPORARY PROTECTION FOR SUBGRADE UNTIL SLAB IS CAST TO PREVENT WATER INFILTRATION INTO SUBGRADE.
17. SURFACE RUNOFF SHALL BE DIRECTED AWAY FROM FOUNDATION EXCAVATIONS AND NOT BE PERMITTED TO POND WITHIN THE BUILDING FOOTPRINT. PROVIDE DRAINAGE TRENCHES FROM FOUNDATION EXCAVATIONS TO DIRECT RAINWATER OUT OF EXCAVATIONS.

MICROPILE CONSTRUCTION

1. REFER TO GEOTECHNICAL REPORT PREPARED BY SOLID GROUND, CONSULTING ENGINEERS, DATED SEPTEMBER 16, 2025.
2. ALL MICROPILES SHALL BE INSTALLED FROM THE LEVEL EXISTING AFTER GENERAL EXCAVATION HAS PROGRESSED TO EXTENT REQUIRED. SEE SPECIFICATIONS FOR TOLERANCES IN MICROPILE INSTALLATION.
3. ALL MICROPILES SHALL BE INSPECTED DURING DRILLING AND PLACING OF GROUT. A COMPLETE REPORT OF EACH MICROPILE INSTALLED SHALL BE MADE. SEE SPECIFICATIONS FOR REQUIREMENTS OF INSPECTION AND REPORT.
4. ALL MICROPILES SHALL BE FILLED WITH MINIMUM 4000 PSI GROUT (28-DAY STRENGTH).
5. CENTERLINES OF ALL MICROPILES SHALL BE CHECKED FOR CONFORMANCE TO SPECIFICATION. ANY DEVIATION FROM THE ACCEPTABLE INSTALLATION TOLERANCES SHALL BE REPORTED TO THE ENGINEER. ANY CORRECTIVE MEASURES REQUIRED BECAUSE OF MISALIGNMENT BEYOND THE PERMISSIBLE TOLERANCE IS THE RESPONSIBILITY OF THE MICROPILE CONTRACTOR.
6. THE LOCATION OF EXISTING SEWER AND UNDERGROUND UTILITIES SHALL BE VERIFIED PRIOR TO THE DRILLING OF MICROPILES. IF NEW MICROPILES AS SHOWN ON PLAN WILL ENCROACH UPON THOSE EXISTING STRUCTURES, THE CONTRACTOR SHALL CONTACT THE ENGINEER FOR DIRECTION PRIOR TO PLACING MICROPILES.
7. SEE SPECIFICATIONS FOR ADDITIONAL INFO.

CONCRETE CONSTRUCTION

1. ALL CONCRETE CONSTRUCTION TO BE IN ACCORDANCE WITH THE BUILDING CODE REQUIREMENTS FOR REINFORCED CONCRETE ACI 301, ACI 318, ACI 350 AND ACI DETAILING MANUAL, EXCEPT THAT CONSTRUCTION AND REMOVAL OF FORMS AND RESHORING SHALL BE INSPECTED BY THE CONTRACTOR'S ENGINEER.
2. FURNISH BAR SUPPORTS WHERE NECESSARY DURING CONSTRUCTION.
3. PROVIDE PLASTIC, PLASTIC-COATED (NOT PLASTIC-TIPPED) OR STAINLESS STEEL CHAIRS IN ALL CONCRETE EXPOSED TO VIEW IN COMPLETED STRUCTURE.
4. PROVIDE PIPE SLEEVES AND INSERTS IN CONCRETE WORK WHERE REQUIRED. SEE ARCHITECTURAL AND MECHANICAL DRAWINGS.
5. OBTAIN APPROVAL OF STRUCTURAL ENGINEER BEFORE LOCATING SLEEVES, HOLES, OR INSERTS IN SLABS WITHIN 2'-0" OF FACE OF COLUMNS OR ANYWHERE IN BEAMS, JOISTS, OR COLUMNS.
6. PROVIDE A MINIMUM OF #4 DOWELS AT 12" O.C. CONNECTING FRAMED FLOORS TO CONCRETE WALLS.
7. PROVIDE A MINIMUM OF 3/8" CAMBER IN ALL CONCRETE WORK WHEN SPANS EXCEED 20'-0".
8. CONSTRUCTION JOINTS SHALL BE POSITIONED SO AS NOT TO CHANGE THE STRUCTURAL DESIGN REQUIREMENTS. FRAMED FLOORS AND ROOFS SHALL HAVE CONSTRUCTION JOINTS SO THAT NO MORE THAN 10,000 S.F. IS IN ANY SINGLE POUR AND THE MAXIMUM LENGTH OF POUR IS 100'-0". RATIO OF LENGTH TO WIDTH OF POUR SHALL NOT EXCEED 2. LOCATION OF ALL CONSTRUCTION JOINTS SHALL BE APPROVED BY THE ENGINEER.
9. WELDING OF REINFORCING BARS (INCLUDING TACK WELDING) IS NOT PERMITTED.
10. PROVIDE HORIZONTAL KEYWAYS IN CONSTRUCTION JOINTS IN SUPPORTED SLABS, WALLS, AND WALL FOOTINGS; MINIMUM 1 1/2" DEPTH WITH HEIGHT EQUAL TO ONE-THIRD OF MEMBER DEPTH, UNLESS OTHERWISE SHOWN OR NOTED.
11. ALL EXPOSED CORNERS OF CONCRETE SHALL BE CHAMFERED 45 DEGREES. MINIMUM CHAMFER TO BE 1/2". CURVE THE LEADING EDGE OF STAIR TREADS TO 1/2" RADIUS.
12. REINFORCING FOR SLABS ON GROUND (IN FLAT SHEETS) SHALL BE IN THE MIDDLE OF THE SLAB, UNLESS NOTED OTHERWISE, AND SHALL BE POSITIVELY SUPPORTED AND MAINTAINED IN THIS POSITION DURING PLACEMENT OF CONCRETE.
13. IN SLAB CONSTRUCTION, PROVIDE A MINIMUM OF #4 x 5'-0" AT 12" O.C. TOP OVER BEAMS OR WALLS WHERE SLABS OR JOISTS SPAN PARALLEL TO BEAMS OR WALLS.
14. BEND ALL HORIZONTAL WALL AND FOOTING BARS 1'-0" AROUND CORNERS OR PROVIDE CORNER BARS WITH 2'-0" LAP.
15. PROVIDE FOUNDATION DOWELS FOR ALL WALLS, PIERS, AND COLUMNS SAME SIZE AND SPACING AS VERTICAL STEEL.
16. PROVIDE FOUNDATION DOWELS FOR MASONRY WALLS SAME SIZE AND SPACING AS VERTICAL STEEL. ALL DOWELS SHALL BE WITHIN 8" LATERALLY OF WALL REINFORCING ABOVE AND IN LINE WITH THE WALL REINFORCING. PROVIDE DOWELS FOR ALL ADDITIONAL WALL REINFORCING AT CORNERS, ENDS, JAMBS, INTERSECTIONS AND BOTH SIDES OF CONTROL JOINTS. ONLY DOWELS AT THESE ADDITIONAL LOCATIONS MAY BE POST INSTALLED / DRILLED AND ADHESIVE FASTENED WITH EMBEDMENT AS REQUIRED TO DEVELOP FULL YIELD STRENGTH OF REINFORCING.
17. SPLICES: ALL REINFORCING SPLICES SHALL BE AS TENSION LAP, U.N.O.
A. LAP ALL COMPRESSION SPLICES 30 BAR DIAMETERS OF THE LARGER BAR.
B. LAP ALL TENSION SPLICES (ALL SPLICES EXCEPT COLUMN SPLICES, U.N.O.) IN ACCORDANCE WITH THE FOLLOWING TABLE. MODIFY LENGTHS AS NOTED:

BAR SIZE	CONCRETE COMPRESSIVE STRENGTH		
	3,000 PSI	4,000 PSI	5,000 PSI
#3	21"	19"	17"
#4	29"	25"	22"
#5	36"	31"	28"
#6	43"	37"	33"
#7	62"	54"	48"
#8	71"	62"	55"

1. INCREASE SPLICE LENGTH BY THE FOLLOWING:
2. NOTE: INCREASED LENGTHS ARE ACCUMULATIVE
1. HORIZONTAL TOP BARS WITH GREATER THAN 12" OF CONCRETE BELOW +30 %
2. BAR SPACING LESS THAN 2 BAR DIAMETERS +50 %

18. CONCRETE PROTECTION FOR REINFORCEMENT: COVER
A. CONCRETE CAST AGAINST AND PERMANENTLY EXPOSED TO EARTH ..... 3"
B. CONCRETE EXPOSED TO EARTH OR WEATHER
NO. 6 THROUGH NO. 18 BARS ..... 2"
NO. 5 BAR, W31 OR D31 WIRE AND SMALLER ..... 1 ½"
C. CONCRETE NOT EXPOSED TO WEATHER OR IN CONTACT WITH GROUND
SLABS, WALLS, AND JOISTS
NO. 11 BAR AND SMALLER ..... ¾"

LOOSE LINTEL SCHEDULE

1. THIS SCHEDULE IS FOR LINTELS OVER MASONRY OPENINGS NOT OTHERWISE SHOWN OR NOTED ON DRAWINGS, INCLUDING NON-BEARING PARTITION WALLS AND VENEERS.
A. SEE TYPICAL DETAILS FOR BOND BEAM CONSTRUCTION.
B. PROVIDE LINTELS ABOVE ALL PENETRATIONS 16" AND WIDER THROUGH MASONRY WALLS; INCLUDING DUCT PENETRATIONS, LOUVERS, GROUPED CONDUITS, WINDOWS, ET CETERA.
2. FOR 8" MASONRY WALLS PROVIDE:

SPAN LIMITS	LINTEL SIZE
0" TO 6'-0"	8" BOND BEAM TYPE ML8 SEE DET B/S-4-1
6'-1" TO 9'-6"	16" BOND BEAM TYPE ML16 SEE DET B/S-4-1

14. SEE DETAILS AND SCHEDULES FOR LOCATIONS AND SIZES OF HORIZONTAL AND VERTICAL REINFORCEMENT.
15. REINFORCE BOND BEAMS WITH (2) #5 CONTINUOUS, UNLESS NOTED OTHERWISE. PROVIDE CORNER BARS FOR ALL BOND BEAM REINFORCEMENT.
16. IN ADDITION TO SPACING INDICATED IN SCHEDULE, PROVIDE VERTICAL BARS AT ALL CORNERS, ENDS, JAMBS, INTERSECTIONS AND BOTH SIDES OF CONTROL JOINTS.
17. EXTEND ALL VERTICAL REINFORCEMENT THRU MID-HEIGHT BOND BEAMS. EXTEND VERTICAL REINFORCING INTO BOND BEAMS AT TOP OF WALL AND TERMINATE AT 2" DOWN FROM TOP OF WALL.
18. PROVIDE DOWELS FROM SUPPORTING MEMBER (FOOTING, BEAM, OR SLAB) FOR ALL REINFORCED WALLS, SAME SIZE, LOCATION, AND SPACING AS WALL REINFORCING.
19. VERTICAL REINFORCEMENT SHALL BE CENTERED IN CELLS OF MASONRY UNIT, UNLESS NOTED OTHERWISE.
20. WHERE REQUIRED BY CONSTRUCTION GEOMETRY/DETAILING, BAR POSITIONERS SHALL BE USED TO HOLD BOND BEAM REINFORCEMENT IN PROPER ALIGNMENT.
21. BAR POSITIONERS SHALL BE USED TO HOLD VERTICAL REINFORCEMENT IN PROPER ALIGNMENT WHERE C.M.U. BLOCK IS CONSTRUCTED SUCH THAT THE GROUT POUR HEIGHT EXCEEDS 5 FEET 4 INCHES.
22. BAR POSITIONERS SHALL BE USED TO HOLD VERTICAL REINFORCEMENT IN PROPER ALIGNMENT FOR ALL C.M.U. CONSTRUCTION WHERE VERTICAL BARS ARE NOTED TO BE OFF-CENTER IN THE MASONRY CELL, REGARDLESS OF GROUT POUR HEIGHT.
23. BAR POSITIONERS ARE NOT REQUIRED WHERE GROUT POURS ARE 5 FEET 4 INCHES OR LESS WITH VERTICAL BARS CENTERED IN THE C.M.U. CELL. THE ENGINEER OF RECORD MAY REQUIRE THE USE OF BAR POSITIONERS REGARDLESS OF GROUT POUR HEIGHT IF SPECIAL INSPECTIONS AND/OR SITE OBSERVATIONS INDICATE THAT BARS ARE NOT BEING CORRECTLY POSITIONED.
24. WHERE BAR POSITIONERS ARE REQUIRED, VERTICAL BARS SHALL BE HELD IN POSITION AT TOP AND BOTTOM AND AT INTERVALS NOT EXCEEDING 4 FEET.
25. GROUTING OF MASONRY LINTELS OVER OPENINGS SHALL BE ACCOMPLISHED IN ONE CONTINUOUS OPERATION.
26. WHERE LOW CUT WEB, OPEN CELLED C.M.U. ARE USED FOR BOND BEAMS, PROVIDE A CONTINUOUS METAL LATH GROUT RETAINER IN THE BED JOINT TO RETAIN GROUT IN CELLS.
27. VERTICAL REINFORCING BARS SHALL HAVE A MINIMUM CLEARANCE OF 3/4" FROM THE MASONRY SURFACE AND NOT LESS THAN ONE BAR DIAMETER BETWEEN BARS.
28. MAINTAIN CLEAR DISTANCE OF 1/4" MINIMUM FOR FINE GROUT OR 1/2" MINIMUM FOR COARSE GROUT BETWEEN REINFORCING BARS AND ANY FACE OF MASONRY UNIT.
29. MASONRY PROTECTION FOR REINFORCEMENT: COVER
A. MASONRY EXPOSED TO EARTH OR WEATHER
NO. 5 BAR AND SMALLER ..... 1 ½"
B. MASONRY NOT EXPOSED TO WEATHER OR IN CONTACT WITH GROUND
ALL BARS ..... 1 ½"
30. WHERE MULTIPLE FULL-HEIGHT BARS ARE SPECIFIED FOR THE SAME MASONRY CELL, THE CLEAR DISTANCE BETWEEN PARALLEL BARS SHALL NOT BE LESS THAN THE NOMINAL BAR DIAMETER, NOR 1 INCH.
31. REMOVE MORTAR PROTRUSIONS GREATER THAN 1/2" FROM CELLS BEFORE GROUTING.
32. GROUTING SHALL BE STOPPED 1 1/2" BELOW THE TOP OF A COURSE TO FORM A KEY AT THE POUR JOINT.
33. GROUT ALL CELLS OF CONCRETE MASONRY UNITS BELOW GRADE.
34. DO NOT EXCEED THE MAXIMUM GROUT POUR HEIGHT FOR EACH GROUT TYPE AND SPACE GIVEN IN THE FOLLOWING TABLE:

GROUT TYPE	MAXIMUM GROUT POUR HEIGHT	MINIMUM WIDTH OF GROUT SPACE	MINIMUM GROUT SPACE DIMENSIONS FOR GROUTING CELLS OF HOLLOW UNITS
FINE	1'-0"	3/4"	1 1/2" x 2"
FINE	5'-4"	2"	2" x 3"
FINE	12'-8"	2 1/2"	2 1/2" x 3"
FINE	24'-0"	3"	3" x 3"
COARSE	1'-0"	1 1/2"	1 1/2" x 3"
COARSE	5'-4"	2"	2 1/2" x 3"
COARSE	12'-8"	2 1/2"	3" x 3"
COARSE	24'-0"	3"	3" x 4"

35. P

CON'T GENERAL NOTES

SITE OBSERVATION BY THE STRUCTURAL ENGINEER

1. THE ENGINEER HAS NO CONTROL OR CHARGE OF, AND SHALL NOT BE RESPONSIBLE FOR CONSTRUCTION MEANS, METHODS, TECHNIQUES, SEQUENCES, OR PROCEDURES; FOR SAFETY PRECAUTIONS AND PROGRAMS IN CONNECTION WITH THE WORK; FOR THE ACTS OR OMISSION OF THE CONTRACTOR, SUBCONTRACTOR, OR ANY OTHER PERSONS PERFORMING ANY OF THE WORK, OR FOR THE FAILURE OF ANY OF THEM TO CARRY OUT THE WORK IN ACCORDANCE WITH THE CONTRACT DOCUMENTS.
2. THE ENGINEER SHALL NOT BE RESPONSIBLE FOR ANY ACTS OR OMISSIONS OF THE CONTRACTOR, ANY SUBCONTRACTOR, MATERIAL SUPPLIER, OR AGENTS THEREOF. THE ENGINEER DOES NOT GUARANTEE THE PERFORMANCE OF THE CONTRACTOR AND SHALL NOT BE RESPONSIBLE FOR THE CONTRACTOR'S FAILURE TO PERFORM ITS WORK IN ACCORDANCE WITH THE CONTRACT DOCUMENTS OR APPLICABLE LAWS, CODES, RULES, OR REGULATIONS. THE CONTRACTOR SHALL MAINTAIN SOLE RESPONSIBILITY FOR DEFECTS AND DEFICIENCIES, INCLUDING PROVIDING TESTING AND INSPECTION ONCE SUCH ARE DISCOVERED, AND FOR PROVIDING ENGINEERED CORRECTIVE ACTION FOR DESIGN TEAM REVIEW.
3. PERIODIC SITE OBSERVATION BY FIELD REPRESENTATIVES OF BROWN+KUBICAN, PSC IS SOLELY FOR THE PURPOSE OF DETERMINING IF THE WORK OF THE CONTRACTOR IS PROCEEDING IN GENERAL ACCORDANCE WITH THE STRUCTURAL CONTRACT DOCUMENTS. THIS LIMITED SITE OBSERVATION SHALL NOT BE CONSTRUED AS EXHAUSTIVE OR CONTINUOUS TO CHECK THE QUALITY, QUANTITY, OR ACCURACY OF THE CONSTRUCTION WORK, BUT RATHER PERIODIC IN EFFORT TO INFORM THE CLIENT ABOUT GENERAL PROGRESS AND TO ADVISE THE CLIENT ABOUT OBSERVED DEFECTS AND DEFICIENCIES IN THE WORK OF THE CONTRACTOR.

MAINTENANCE STATEMENT AND STRUCTURE LIFESPAN

1. THE ENGINEER MAKES NO CLAIM OR AGREEMENT AS TO THE LIFESPAN OF THE BUILDING STRUCTURE. THE CLIENT AND OWNER SHALL UNDERSTAND THAT STRUCTURAL TYPES DO HAVE LIFESPAN RELATIVE TO INITIAL COST AND MAINTENANCE AND THAT BY REQUESTING OR ACCEPTING A STRUCTURAL SYSTEM OF LOWER INITIAL COST THAT THE USEABLE LIFESPAN WILL DECREASE AND MAINTENANCE INCREASE.
2. ALL STRUCTURES REQUIRE PERIODIC MAINTENANCE TO EXTEND LIFESPAN AND TO ENSURE STRUCTURAL INTEGRITY FROM EXPOSURE TO THE ENVIRONMENT. THE ENGINEER SHALL NOT BE HELD LIABLE FOR MAINTENANCE REQUIREMENTS OR DETERIORATION RESULTING FROM LACK OF BUILDING MAINTENANCE.
3. A PLANNED PROGRAM OF MAINTENANCE SHALL INCLUDE ITEMS SUCH AS, BUT NOT LIMITED TO: PAINTING OF STRUCTURAL STEEL AND LINTELS, PROTECTIVE COATING FOR CONCRETE AND TIMBER, SEALANTS, CAULKED JOINTS, EXPANSION JOINTS, CONTROL JOINTS, TIMELY REPAIR OF SPALLS AND CRACKS IN CONCRETE, AND PRESSURE WASHING OF STRUCTURAL ELEMENTS EXPOSED TO A SALT ENVIRONMENT OR OTHER HARSH CHEMICALS.

MATERIAL LEGEND

BEDROCK
FLOWABLE FILL
C.M.U. "IN SECTION"
CRUSHED STONE
DENSE GRADED AGGREGATE (D.G.A.)
MASONRY GROUT "IN SECTION"
NATIVE EARTH / ENGINEERED FILL
CONCRETE

STRUCTURAL ABBREVIATIONS

AHU	AIR HANDLING UNIT	GLULAM	GLUED-LAMINATED TIMBER
APA	AMERICAN PLYWOOD ASSOCIATION	HORIZ	HORIZONTAL
ARCH	ARCHITECTURAL	HSS	HOLLOW STRUCTURAL SECTION
B/	BOTTOM	I.C.F.	INSULATED CONCRETE FORM
B.L.E.	BRICK LEDGE ELEVATION	LBS	POUNDS
BOT	BOTTOM	L.D.H.	LONG DIMENSION HORIZONTAL
BTWN	BETWEEN	L.D.V.	LONG DIMENSION VERTICAL
CANT	CANTILEVER BEAM	LVL	LAMINATED VENEER LUMBER
C.F.S.	COLD-FORMED STEEL	MANUF	MANUFACTURER
C.I.P.	CAST-IN-PLACE	MAX	MAXIMUM
CJP	COMPLETE JOINT PENETRATION	MECH	MECHANICAL
CLR	CLEAR	M.E.P.	MECHANICAL/ELECTRICAL/PLUMBING
C.L.T.	CROSS-LAMINATED TIMBER	MIN	MINIMUM
C.M.U.	CONCRETE MASONRY UNIT	N.I.C.	NOT IN CONTRACT
COL	COLUMN	N.S.	NEAR SIDE
CONC	CONCRETE	N.T.S.	NOT TO SCALE
CONT	CONTINUOUS	O.C.	ON CENTER
D	DEEP	O.P.H.	OPPOSITE HAND
DL	DEAD LOAD	P.A.F.	POWDER ACTUATED FASTENER
DET	DETAIL	P.E.M.B.	PRE-ENGINEERED METAL BUILDING
D.G.A.	DENSE GRADED AGGREGATE	PJP	PARTIAL JOINT PENETRATION
DWGS	DRAWINGS	PL	PLATE
EA	EACH	P.T.	PRESERVATIVE-TREATED
EF	EXHAUST FAN	R	RADIUS
E.F.	EACH FACE	R.A.P.	RAMMED AGGREGATE PIERS
ELEV	ELEVATION	REINF	REINFORCEMENT
EMBED	MINIMUM EMBEDMENT DEPTH INTO SUBSTRATE	RTU	ROOF TOP UNIT (MECHANICAL)
E.O.R.	ENGINEER OF RECORD	S.C.	SLIP CRITICAL
E.O.S.	EDGE OF SLAB	SIM	SIMILAR
E.W.	EACH WAY	S.O.G.	SLAB ON GRADE
EX	EXISTING	SP	COLUMN SPLICE
EXP	EXPANSION	S.S.	STAINLESS STEEL
F.F.E.	FINISHED FLOOR ELEVATION	STD	STANDARD
F.R.C.	FIBER REINFORCED CONCRETE	T/	TOP
F.R.P.	FIBER REINFORCED POLYMER	TYP	TYPICAL
F.R.T.	FIRE RESISTANCE TREATED	U.N.O.	UNLESS NOTED OTHERWISE
F.S.	FAR SIDE	VERT	VERTICAL
FTG	FOOTING	W	WIDE
F.V.	FIELD VERIFY	W/	WITH
GA	GAUGE	W.W.F.	WELDED WIRE FABRIC
GALV	GALVANIZED	Z.R.P.	ZINC-RICH PRIMED

BROWN+KUBICAN
STRUCTURAL ENGINEERS
8900 Greeneway Commons Pl #201 Louisville, KY 40220
502-749-2061 www.brownkubican.com

FAILURE TO ABIDE BY DESIGN PROFESSIONAL'S DIRECTIONS OR TO OBTAIN GUIDANCE

THE DESIGN PROFESSIONAL IN WHOS NAME THESE PLANS ARE ISSUED HAS PERFORMED SERVICES IN CONNECTION WITH THE PREPARATION OF THESE PLANS AND SPECIFICATIONS. THE DESIGN PROFESSIONAL IN RESPONSIBLE CHARGE ACTIVITY (RCA) AS DEFINED BY THE STATE LAW HAS PERFORMED SERVICES IN CONNECTION WITH THE PREPARATION OF THESE PLANS AND SPECIFICATIONS. THE CONTRACTOR AND ALL OTHER PERSONS USING THESE PLANS AND SPECIFICATIONS AGREE THAT ANY AND ALL CLAIMS, DAMAGES, LOSSES AND EXPENSES ARISING OUT OF OR RESULTING FROM THE PERFORMANCE OF THE CONTRACTOR'S WORK, ANY DEVIATION FROM THESE PLANS AND SPECIFICATIONS, OR THE FAILURE OF THE CONTRACTOR TO ABIDE BY THESE PLANS AND SPECIFICATIONS, SHALL BE LIMITED TO THE AMOUNT OF THE DESIGN PROFESSIONAL'S INSURANCE COVERAGE AVAILABLE TO COVER SUCH CLAIMS, DAMAGES, LOSSES AND EXPENSES. THE CONTRACTOR AND ALL OTHER PERSONS USING THESE PLANS AND SPECIFICATIONS AGREE TO WAIVE ANY CLAIM AGAINST THE DESIGN PROFESSIONAL IN EXCESS OF SUCH INSURANCE COVERAGE. THE CONTRACTOR AND ALL OTHER PERSONS USING THESE PLANS AND SPECIFICATIONS AGREE TO INDEMNIFY AND HOLD HARMLESS THE DESIGN PROFESSIONAL FROM ANY CLAIMS, DAMAGES, LOSSES AND EXPENSES IN EXCESS OF SUCH INSURANCE COVERAGE. THE DESIGN PROFESSIONAL'S GUIDANCE WITH RESPECT TO ANY DEVIATIONS, INCONSISTENCIES, AMBIGUITIES OR CONFLICTS WHICH ARE ALLEGED.

IT IS A VIOLATION OF LAW FOR ANY PERSON TO ALTER THIS DRAWING WITHOUT WRITTEN PERMISSION FROM KENTUCKY ENGINEERING GROUP, PLLC AND ACTING UNDER THE DIRECTION OF A LICENSED ENGINEER.

THIS DRAWING WAS PREPARED AT THE SCALE INDICATED. INACCURACIES IN THE STATED SCALE MAY BE INTRODUCED WHEN DRAWINGS ARE REPRODUCED BY ANY MEANS. USE THE GRAPHIC SCALE BAR IN THE DRAWING OR TITLE BLOCK TO DETERMINE THE ACTUAL SCALE.

NO.	DATE	REVISIONS	BY

DATE:	2/16/26
PROJECT MGR:	JAB
DRAWN BY	SWC
CHECKED BY	JAB
SCALE:	AS NOTED

2022 © Kentucky Engineering Group, PLLC

P.O. Box 1034
VERSAILLES, KENTUCKY 40383
KENTUCKY ENGINEERING GROUP, PLLC

WATER TREATMENT PLANT
GAC FACILITY
FOR THE
CITY OF CYNTHIANA

GENERAL NOTES

STATE OF KENTUCKY
JASON ALLEN BUSH
LICENSED
PROFESSIONAL ENGINEER
BROWN + KUBICAN, PSC
2/16/26

PROJECT NO.
25009

SHEET NO.
S-1-2

STRUCTURAL SPECIAL INSPECTIONS CHART

COMPONENT	TEST OR SPECIAL INSPECTION	PERIODIC OR CONTINUOUS	ACCEPTABLE QUALIFICATIONS
FABRICATORS (IBC 1704.2.5)	INSPECT THE FABRICATION OF STRUCTURAL LOAD-BEARING MEMBERS WHERE SUCH WORK IS BEING PERFORMED ON THE PREMISES OF THE FABRICATOR'S SHOP. 1. FABRICATORS SHALL BE EXEMPT FROM SPECIAL INSPECTION WHEN A QUALIFIED CERTIFICATION AUTHORITY HAS PERIODICALLY REVIEWED AND APPROVED FABRICATOR'S WRITTEN PROCEDURAL AND QUALITY CONTROL MANUALS AND FABRICATION PRACTICES. SUBJECT TO COMPLIANCE WITH KENTUCKY BUILDING CODE REQUIREMENTS, QUALIFIED CERTIFICATION AUTHORITIES PROVIDING CERTIFICATION WHICH MAY BE APPLICABLE TO PROJECT INCLUDE, BUT ARE NOT LIMITED TO, THE FOLLOWING: a. PRE-ENGINEERED METAL BUILDING SYSTEM FABRICATORS - IAS INSPECTION PROGRAMS FOR MANUFACTURERS OF METAL BUILDING SYSTEMS, AC472.	PERIODIC	COMPLY WITH SECTIONS BELOW WHEN REQUIRED
	VERIFY THAT THE FABRICATOR MAINTAINS AND REVIEW FOR COMPLETENESS FABRICATOR'S DETAILED FABRICATION AND QUALITY CONTROL PROCEDURES, WHICH PROVIDE A BASIS FOR CONTROL OF THE WORKMANSHIP AND ABILITY TO CONFORM TO THE APPROVED CONSTRUCTION DOCUMENTS AND REFERENCE STANDARDS. REVIEW THE PROCEDURES FOR COMPLETENESS AND ADEQUACY RELATIVE TO THE CODE REQUIREMENTS FOR THE FABRICATOR'S SCOPE OF WORK.	PERIODIC	QUALIFIED CERTIFICATION AUTHORITY
	PERFORM SPECIAL INSPECTIONS AT FABRICATOR'S SHOP AS OUTLINED IN THIS CHART FOR EACH TYPE OF CONSTRUCTION.	- - - -	
CONCRETE CONSTRUCTION (IBC 1705.3)	PROVIDE SPECIAL INSPECTION OF THE FABRICATION OF CONCRETE STRUCTURAL ELEMENTS AND ASSEMBLIES IN ACCORDANCE WITH THE FABRICATORS SECTION IN THIS CHART.	- - - -	
	INSPECT FORMWORK FOR SHAPE, LOCATION, AND DIMENSIONS OF THE CONCRETE MEMBER BEING FORMED.	PERIODIC	RCSI, ACI-2, NICET-2C
	VERIFY THE USE OF THE PROPER DESIGN MIX.	PERIODIC	RCSI, ACI-2, NICET-2C
	VERIFY USE OF PROPER GRADE AND ASTM DESIGNATION OF REINFORCING STEEL.	PERIODIC	RCSI, ACI-2, NICET-2C
	PERFORM INSPECTION ON PLACEMENT, SPACING, CLEAR COVER, NUMBER, SPLICE LAP LENGTHS, AND MECHANICAL COUPLERS OF REINFORCING STEEL.	PERIODIC	RCSI, NICET-2C
	MONITOR CONCRETE QUALITY BY MEANS OF SITE AND LABORATORY TESTS. THE INSPECTION AGENCY IS AUTHORIZED TO REJECT PLASTIC CONCRETE NOT CONFORMING TO SPECIFICATIONS. IMMEDIATELY INFORM THE CONTRACTOR, THE ARCHITECT AND THE STRUCTURAL ENGINEER OF INADEQUACIES IN CONCRETE QUALITY. SAMPLING AND TESTING FOR QUALITY CONTROL DURING CONCRETE PLACEMENT SHALL INCLUDE THE FOLLOWING: 1. TESTING OF COMPOSITE SAMPLES OF FRESH CONCRETE OBTAINED ACCORDING TO ASTM C 172 SHALL BE PERFORMED ACCORDING TO THE FOLLOWING REQUIREMENTS: a. TESTING FREQUENCY: OBTAIN ONE COMPOSITE SAMPLE FOR EACH DAY'S POUR OF EACH CONCRETE MIXTURE EXCEEDING 5 CU. YD., BUT LESS THAN 25 CU. YD., PLUS ONE SET FOR EACH ADDITIONAL 50 CU. YD. OR FRACTION THEREOF. b. SLUMP: ASTM C 143; ONE TEST AT POINT OF PLACEMENT FOR EACH COMPOSITE SAMPLE, BUT NOT LESS THAN ONE TEST FOR EACH DAY'S POUR OF EACH CONCRETE MIXTURE. PERFORM ADDITIONAL TESTS WHEN CONCRETE CONSISTENCY APPEARS TO CHANGE. c. AIR CONTENT: ASTM C 231, PRESSURE METHOD, FOR NORMAL-WEIGHT CONCRETE;ONE TEST FOR EACH COMPOSITE SAMPLE, BUT NOT LESS THAN ONE TEST FOR EACH DAY'S POUR OF EACH CONCRETE MIXTURE. d. CONCRETE TEMPERATURE: ASTM C 1064; ONE TEST HOURLY WHEN AIR TEMPERATURE IS 40 DEG F AND BELOW OR 80 DEG F AND ABOVE, AND ONE TEST FOR EACH SET OF COMPOSITE SAMPLE. e. COMPRESSION TEST SPECIMEN: ASTM C 31; ONE SET OF FOUR STANDARD 6" DIAMETER BY 12" OR FIVE STANDARD 4" DIAMETER BY 8" CYLINDERS FOR EACH COMPRESSIVE-STRENGTH TEST, UNLESS OTHERWISE DIRECTED. MOLD AND STORE CYLINDERS FOR LABORATORY-CURED TEST SPECIMENS EXCEPT WHEN FIELD-CURED TEST SPECIMENS ARE REQUIRED. f. COMPRESSIVE-STRENGTH TESTS: ASTM C 39; TEST ONE SPECIMEN AT 7 DAYS, TWO 6"x12" OR THREE 4"x8" SPECIMENS TESTED AT 28 DAYS, AND ONE SPECIMEN RETAINED IN RESERVE FOR LATER TESTING IF REQUIRED. ADDITIONAL CYLINDER TESTS (SUCH AS AT 14 DAYS) FOR CONTRACTOR CONVENIENCE AND SCHEDULING SHALL BE PAID FOR BY THE CONTRACTOR. A COMPRESSIVE-STRENGTH TEST SHALL BE THE AVERAGE COMPRESSIVE STRENGTH FROM A SET OF SPECIFIED NUMBER SPECIMENS OBTAINED FROM SAME COMPOSITE SAMPLE AND TESTED AT AGE INDICATED. g. WHEN FREQUENCY OF TESTING WILL PROVIDE FEWER THAN FIVE STRENGTH TESTS FOR A GIVEN CLASS OF CONCRETE, CONDUCT TESTING FROM AT LEAST FIVE RANDOMLY SELECTED BATCHES OR FROM EACH BATCH IF FEWER THAN FIVE ARE USED. h. WHEN STRENGTH OF FIELD-CURED CYLINDERS IS LESS THAN 85 PERCENT OF COMPANION LABORATORY-CURED CYLINDERS, CONTRACTOR SHALL EVALUATE OPERATIONS AND PROVIDE CORRECTIVE PROCEDURES FOR PROTECTING AND CURING THE IN-PLACE CONCRETE. i. STRENGTH OF EACH CONCRETE MIXTURE WILL BE SATISFACTORY IF EVERY AVERAGE OF ANY THREE CONSECUTIVE COMPRESSIVE-STRENGTH TESTS EQUALS OR EXCEEDS SPECIFIED COMPRESSIVE STRENGTH AND NO COMPRESSIVE-STRENGTH TEST VALUE FALLS BELOW SPECIFIED COMPRESSIVE STRENGTH BY MORE THAN 500 PSI. 2. TEST RESULTS SHALL BE REPORTED IN WRITING TO ARCHITECT, STRUCTURAL ENGINEER, READY-MIX PRODUCER, AND CONTRACTOR WITHIN 48 HOURS OF TESTING. REPORTS OF COMPRESSIVE-STRENGTH TESTS SHALL CONTAIN THE PROJECT IDENTIFICATION NAME AND NUMBER, DATE OF CONCRETE PLACEMENT, NAME OF CONCRETE TESTING AND INSPECTING AGENCY, CONCRETE TYPE AND CLASS, LOCATION OF CONCRETE BATCH IN STRUCTURE, DESIGN COMPRESSIVE STRENGTH AT 28 DAYS, CONCRETE MIXTURE PROPORTIONS AND MATERIALS, COMPRESSIVE BREAKING STRENGTH, AND TYPE OF BREAK FOR BOTH 7- AND 28-DAY TESTS.	CONTINUOUS	RCSI, ACI-2, NICET-1
	PERFORM INSPECTION OF CONCRETE PLACEMENT TO VERIFY PROPER APPLICATION TECHNIQUES, INCLUDING BUT NOT LIMITED TO SLABS ON GRADE, WALLS, GRADE BEAMS, FOOTINGS, AND FRAMED CONCRETE SLABS.	CONTINUOUS	RCSI, ACI-2, NICET-1
	PERFORM INSPECTION OF CONCRETE CURING PROCEDURES TO VERIFY MAINTENANCE OF SPECIFIED CURING TEMPERATURE, PROTECTION, AND TECHNIQUES.	PERIODIC	RCSI, ACI-2, NICET-1
	TEST THE F-NUMBER TOLERANCES OF CONCRETE SLABS IN ACCORDANCE WITH THE PROVISIONS SET FORTH BY ASTM COMMITTEE E6.21.10. ALL TESTS SHALL BE PERFORMED WITHIN THREE WORKING DAYS AFTER CONCRETE PLACEMENT AND PRIOR TO ANY FORM REMOVAL. 1. SLAB AREAS SHALL BE TESTED FOR F-NUMBER TOLERANCES FOR THE FIRST 10,000 SQUARE FEET PLACED AT EACH LEVEL. THEREAFTER, TEST AN ADDITIONAL 1,000 SQUARE FEET PER 10,000 SQUARE FEET OF SLAB AREA AT EACH LEVEL. QUANTITY OF TEST READINGS FOR EACH AREA SHALL BE PER ASTM E1155.	PERIODIC	RCSI, ACI-2, NICET-1
	NONDESTRUCTIVE TESTING: IMPACT HAMMER, SONOSCOPE, OR OTHER NONDESTRUCTIVE DEVICE MAY BE PERMITTED BUT SHALL NOT BE USED AS THE SOLE BASIS FOR ACCEPTANCE OR REJECTION.	- - - -	
	ADDITIONAL TESTS: TESTING AND INSPECTING AGENCY SHALL MAKE ADDITIONAL TESTS OF CONCRETE WHEN TEST RESULTS INDICATE THAT SLUMP, AIR ENTRAINMENT, COMPRESSIVE STRENGTHS, OR OTHER REQUIREMENTS HAVE NOT BEEN MET, AS DIRECTED BY ARCHITECT. TESTING AND INSPECTING AGENCY MAY CONDUCT TESTS TO DETERMINE ADEQUACY OF CONCRETE BY CORED CYLINDERS COMPLYING WITH ASTM C 42 OR BY OTHER METHODS AS DIRECTED BY ARCHITECT. 1. ADDITIONAL TESTING AND INSPECTING, AT CONTRACTOR'S EXPENSE, WILL BE PERFORMED TO DETERMINE COMPLIANCE OF REPLACED OR ADDITIONAL WORK WITH SPECIFIED REQUIREMENTS.	- - - -	

COMPONENT	TEST OR SPECIAL INSPECTION	PERIODIC OR CONTINUOUS	ACCEPTABLE QUALIFICATIONS
MASONRY CONSTRUCTION (IBC 1705.4)	AT ONSET OF MASONRY CONSTRUCTION AND PERIODICALLY THEREAFTER, VERIFY PROPORTIONS OF SITE-PREPARED MORTAR, CONSTRUCTION OF MORTAR JOINTS, AND LOCATION OF REINFORCEMENT AND CONNECTORS.	PERIODIC	SMSI
	PERFORM INSPECTION TO VERIFY SIZE AND LOCATION OF STRUCTURAL ELEMENTS; TYPE, SIZE, AND LOCATION OF ANCHORS, INCLUDING ANCHORAGE TO OTHER STRUCTURAL ELEMENTS, FRAMES, AND CONSTRUCTION; AND SPECIFIED SIZE, GRADE, AND TYPE OF REINFORCEMENT.	PERIODIC	SMSI
	PRIOR TO EACH GROUTING OPERATION, VERIFY CLEANLINESS OF GROUT SPACE, PLACEMENT OF ALL REINFORCEMENT AND CONNECTORS, INCLUDING LAP SPLICE LENGTHS, AND PROPORTIONS OF SITE-PREPARED GROUT.	PERIODIC	SMSI
	PERFORM INSPECTION OF GROUT PLACEMENT TO VERIFY COMPLIANCE WITH CONTRACT DOCUMENT PROVISIONS.	CONTINUOUS	SMSI
	PERFORM INSPECTION OF MASONRY CURING PROCEDURES TO VERIFY MAINTENANCE OF SPECIFIED CURING TEMPERATURE, PROTECTION, AND TECHNIQUES.	PERIODIC	SMSI
	FOR CONCRETE MASONRY DESIGNED IN ACCORDANCE WITH THE UNIT STRENGTH METHOD (AS SPECIFIED ON THE GENERAL NOTES), SAMPLE AND TEST GROUT COMPRESSIVE STRENGTH ACCORDING TO ASTM C 1019, MORTAR COMPRESSIVE STRENGTH ACCORDING TO ASTM C780, AND THE FOLLOWING: 1. COMPRESSION TEST SAMPLE: ONE SET OF THREE STANDARD CUBE SPECIMENS FOR EACH COMPRESSIVE-STRENGTH TEST, UNLESS OTHERWISE DIRECTED. MOLD AND STORE CUBES FOR LABORATORY-CURED TEST SPECIMENS EXCEPT WHEN FIELD-CURED TEST SPECIMENS ARE REQUIRED. 2. COMPRESSIVE-STRENGTH TESTS: AT THE COMMENCEMENT OF CONSTRUCTION TAKE SAMPLES PRIOR TO CONSTRUCTION, THE NEXT 4 SAMPLES FOR EACH 2,500 SQ FEET OF WALL CONSTRUCTION, AND THEN FOLLOWING THEREAFTER FOR EACH 5,000 SQ FEET OF WALL CONSTRUCTION. TEST ONE SPECIMEN AT 7 DAYS, ONE SPECIMEN TESTED AT 28 DAYS, AND ONE SPECIMEN RETAINED IN RESERVE FOR LATER TESTING IF REQUIRED.	PERIODIC	SMSI
SOILS (IBC 1705.6)	INSPECT THE EXISTING SITE SOIL CONDITIONS, FILL PLACEMENT, AND LOAD-BEARING REQUIREMENTS FOR COMPLIANCE WITH THE RECOMMENDATIONS OF THE APPROVED GEOTECHNICAL INVESTIGATION REPORT.	PERIODIC	SSI, NICET-2S
	WHERE THE SITE IS SPECIFIED TO BE UNDERCUT BY THE GEOTECHNICAL INVESTIGATION REPORT, VERIFY ALL UNSUITABLE SOILS, DEBRIS, ROCK AND OTHER MATERIALS HAVE BEEN REMOVED FROM BELOW BUILDING FOOTPRINT. 1. VERIFY THAT TOPSOIL HAS BEEN STRIPPED AND REMOVED FROM BUILDING FOOTPRINT. 2. VERIFY ALL EXISTING UNCONTROLLED FILLS, SOFT AND UNSUITABLE SOILS HAVE BEEN REMOVED FROM BELOW APPLICABLE FOUNDATION ELEMENTS. TEST NATIVE MATERIAL AT BASE OF CUT TO ENSURE THAT UNSUITABLE MATERIAL HAS BEEN COMPLETELY REMOVED; NOTIFY ARCHITECT IF UNACCEPTABLE MATERIAL REMAINS AFTER COMPLETION OF SPECIFIED UNDERCUT. 3. FOR SOIL-BEARING FOUNDATIONS, VERIFY THAT EXPANSIVE CLAYS AND BEDROCK HAVE BEEN COMPLETELY REMOVED TO ALLOW SUFFICIENT SOIL CUSHION DEPTH AS SPECIFIED. 4. AT FOUNDATIONS BEARING ON EXISTING FILL OR SHALE SOILS, PERFORM DYNAMIC CONE PENETROMETER TESTING AT EACH SPREAD FOOTING WHEN FOUNDATION EXCAVATION IS COMPLETE TO ENSURE BEARING CAPACITY IS WITHIN THE RECOMMENDED NET ALLOWABLE.	PERIODIC	SSI, NICET-2S
	OBSERVE PROOFROLLING OF THE BUILDING PAD AREAS PRIOR TO COMMENCEMENT OF FILL/SUBBASE PLACEMENT, AND DURING FILL PLACEMENT (IF REQUIRED).	PERIODIC	SSI, NICET-2S
	PRIOR TO PLACEMENT OF ANY ENGINEERED FILL, DETERMINE THAT THE SITE HAS BEEN PREPARED IN ACCORDANCE WITH THE RECOMMENDATIONS OF THE APPROVED GEOTECHNICAL INVESTIGATION REPORT. 1. TEST SAMPLES FROM PROPOSED BORROW ON- AND OFF- SITE SOURCES OF FILL FOR COMPLIANCE WITH THE APPROVED MATERIALS LISTING AND OTHER REQUIREMENTS OF THE GEOTECHNICAL REPORT AND THE SPECIFICATIONS. CLAY SOILS SHALL BE CHECKED FOR ACCEPTABLE PLASTICITY INDEX PRIOR TO MOVING ON SITE. MAXIMUM ORGANIC CONTENT SHALL BE VERIFIED BY INSPECTION OR TEST TO BE BELOW ACCEPTABLE LIMITS.	PERIODIC	SSI, NICET-2S
	DURING PLACEMENT AND COMPACTION OF THE ENGINEERED FILL MATERIAL, VERIFY THAT THE MATERIAL BEING USED, MAXIMUM LIFT THICKNESS, AND IN-PLACE DRY DENSITY COMPLY WITH THE RECOMMENDATIONS OF THE APPROVED GEOTECHNICAL REPORT. 1. SOIL FILLS SHALL BE EXEMPT FROM SPECIAL INSPECTION WHEN TOTAL FILL PLACEMENT IS LESS THAN 12 INCHES DEEP. 2. TESTING AGENCY TO INSPECT AND TEST SUBGRADES AND EACH FILL OR BACKFILL LAYER.	CONTINUOUS	SSI, NICET-2S
	FOOTING SUBGRADE: AT FOOTING SUBGRADES, AT LEAST ONE TEST OF EACH SOIL STRATUM SHALL BE PERFORMED TO VERIFY DESIGN BEARING CAPACITIES. SUBSEQUENT VERIFICATION AND APPROVAL OF OTHER FOOTING SUBGRADES MAY BE BASED ON A VISUAL COMPARISON OF SUBGRADE WITH TESTED SUBGRADE WHEN APPROVED BY ARCHITECT.	PERIODIC	SSI, NICET-2S
	FOOTING BEARING: AT FOOTINGS BEARING ON ROCK, TEST AND INSPECT BOTTOM OF EXCAVATION OF EACH FOOTING AFTER EXCAVATION AND BEFORE CONCRETE IS PLACED TO VERIFY DESIGN BEARING CAPACITIES. IF UNSUITABLE BEARING STRATUM IS ENCOUNTERED, NOTIFY CONTRACTOR TO PROCEED WITH EXCAVATION UNTIL SUITABLE BEARING IS ACHIEVED. 1. REINSPECT SUBSEQUENT OVEREXCAVATION USING CONTRACTOR-PROVIDED TEST CORES UNTIL ADEQUATE BEARING IS ACHIEVED. 2. IMMEDIATELY NOTIFY ARCHITECT IF 5 FEET OR MORE OVEREXCAVATION IS REQUIRED IN ANY EXCAVATION TO ACHIEVE ADEQUATE BEARING.	PERIODIC	SSI, NICET-2S
	TESTING AGENCY WILL TEST COMPACTION OF SOILS IN PLACE ACCORDING TO ASTM D 1556, ASTM D 2167, ASTM D 6938, AND ASTM D 2937, AS APPLICABLE. TESTS SHALL BE PERFORMED AT THE FOLLOWING LOCATIONS AND FREQUENCIES: 1. BUILDING SLAB AREAS: AT SUBGRADE AND AT EACH COMPACTED FILL AND BACKFILL LAYER, AT LEAST 1 TEST FOR EVERY 2000 SQ. FT. OR LESS OF BUILDING SLAB, BUT IN NO CASE FEWER THAN 3 TESTS. 2. FOUNDATION WALL BACKFILL: AT EACH COMPACTED BACKFILL LAYER, AT LEAST 1 TEST FOR EACH 100 FEET OR LESS OF WALL LENGTH, BUT NO FEWER THAN 2 TESTS.	PERIODIC	SSI, NICET-2S

COMPONENT	TEST OR SPECIAL INSPECTION	PERIODIC OR CONTINUOUS	ACCEPTABLE QUALIFICATIONS
STEEL (AND OTHER METAL) CONSTRUCTION (IBC 1705.2)	PROVIDE SPECIAL INSPECTION OF THE FABRICATION OF STEEL STRUCTURAL ELEMENTS AND ASSEMBLIES IN ACCORDANCE WITH THE FABRICATORS SECTION IN THIS CHART.	- - - -	
	VERIFY THAT CERTIFICATION NUMBERS ON BOLT, NUT, AND WASHER CONTAINERS CORRESPOND TO THE IDENTIFICATION NUMBERS ON MILL TEST REPORTS AND THAT MANUFACTURER'S SYMBOL AND GRADE MARKINGS APPEAR ON ALL BOLTS AND NUTS. ALSO VERIFY THAT BOLTS, NUTS, AND WASHERS ARE BEING PROPERLY CARED FOR AT THE SITE.	PERIODIC	CWI, SSSI, SWSI
	VERIFY THAT IDENTIFICATION MARKINGS ON STRUCTURAL STEEL MEMBERS CONFORM TO ASTM STANDARDS SPECIFIED ON THE APPROVED CONSTRUCTION DOCUMENTS.	PERIODIC	CWI, SSSI, SWSI
	VERIFY THAT IDENTIFICATION MARKINGS ON WELD FILLER MATERIALS CONFORM TO ASTM STANDARDS SPECIFIED ON THE APPROVED CONSTRUCTION DOCUMENTS. ALSO VERIFY THAT WELD FILLER MATERIAL IS BEING PROPERLY CARED FOR.	PERIODIC	CWI, SSSI, SWSI
	VERIFY THAT ANCHOR RODS AND OTHER EMBEDMENTS THAT ARE TO SUPPORT STRUCTURAL STEEL ARE OF PROPER DIAMETER, GRADE, TYPE, LENGTH, AND EXTENT OF EMBEDMENT PRIOR TO PLACEMENT OF CONCRETE.	PERIODIC	CWI, SSSI, SWSI
	TEST AND INSPECT HIGH-STRENGTH BOLTED CONNECTIONS ACCORDING TO RCSC'S "SPECIFICATION FOR STRUCTURAL JOINTS USING HIGH STRENGTH BOLTS." 1. VERIFY THAT FASTENERS ARE OF CORRECT GRADE, TYPE, DIAMETER, LENGTH, AND SHEAR PLANE LOCATIONS FOR THE JOINT DETAIL. 2. VERIFY THAT CONNECTING ELEMENTS MEET REQUIREMENTS FOR FAYING SURFACE AND HOLE PREPARATION. 3. PROVIDE PRE-INSTALLATION VERIFICATION TESTING OF FASTENER ASSEMBLIES AND METHODS. TESTING/INSPECTION METHODS FOR BOLTS SHALL BE DETERMINED, APPROVED, AND CALIBRATED AS NECESSARY PRIOR TO THE START OF STEEL ERECTION. a. UTILIZE A TENSION CALIBRATOR TO CONFIRM THE SUITABILITY OF THE COMPLETE FASTENER ASSEMBLY FOR PRETENSIONED INSTALLATION AND CONFIRM THE PROCEDURE AND PROPER USE BY THE BOLTING CREW OF THE PRETENSIONING METHOD TO BE USED. b. ENSURE THAT JOINT PLIES ARE BROUGHT TO SNUG-TIGHT CONDITION PRIOR TO PRETENSIONING OPERATION. c. CONFIRM FASTENER COMPONENT IS NOT TURNED BY THE WRENCH PREVENTING ROTATION. d. CONFIRM THAT FASTENERS ARE PRETENSIONED PROGRESSING SYSTEMATICALLY FROM THE MOST RIGID PART TOWARDS THE FREE EDGES. 4. VERIFY THAT FASTENER ASSEMBLIES WITH REQUIRED WASHERS ARE PLACED IN ALL HOLES AND ARE POSITIONED AS REQUIRED. a. VERIFY THAT DIRECT-TENSION INDICATOR GAPS COMPLY WITH ASTM F 959, TABLE 2. b. VERIFY THAT TWIST-OFF-TYPE TENSION-CONTROL ASSEMBLIES HAVE BEEN PROPERLY TIGHTENED. 5. PERFORM PERIODIC INSPECTION OF BEARING TYPE CONNECTIONS.	PERIODIC, U.N.O.	CWI, SSSI, SWSI
	INSPECT AND TEST WELDS DURING FABRICATION (WHERE APPLICABLE) AND ERECTION OF STRUCTURAL STEEL: 1. CERTIFY WELDERS AND CONDUCT INSPECTIONS AND TESTS AS REQUIRED. RECORD TYPES AND LOCATIONS OF DEFECTS FOUND IN WORK. RECORD WORK REQUIRED AND PERFORMED TO CORRECT DEFICIENCIES. a. CONFIRM THAT WELDING PROCEDURE SPECIFICATIONS ARE AVAILABLE. b. CONFIRM THAT CONTRACTOR HAS INSTITUTED A *WELDER IDENTIFICATION SYSTEM*.	PERIODIC	CWI, SWSI
	2. INSPECT WELD PROCEDURES AND WELDERS ACCORDING TO THE REQUIREMENTS OF AWS D1.1 AND AISC 360. a. CONFIRM THAT THERE IS NO WELDING OVER CRACKED TACK WELDS. b. CONFIRM THAT ENVIRONMENTAL CONDITIONS ARE BEING PROPERLY CONSIDERED (WIND SPEED, PRECIPITATION, AND TEMPERATURE). c. CONFIRM THAT WELDING PROCEDURE SPECIFICATIONS ARE BEING FOLLOWED (EQUIPMENT SETTINGS, TRAVEL SPEED, MATERIAL USAGE, SHIELDING TYPE AND FLOW RATE, PREHEATING REQUIREMENTS, MAINTENANCE OF INTERPASS TEMPERATURE, AND PROPER WELDER POSITIONING). d. CONFIRM WELDING TECHNIQUES (INTERPASS AND FINAL CLEANING, EACH PASS WITHIN PROFILE LIMITATIONS, AND THAT EACH PASS MEETS QUALITY REQUIREMENTS).	PERIODIC	CWI, SWSI
	3. USE NON-DESTRUCTIVE TESTING ACCORDING TO AWS D1.1 ON ALL WELDS THAT APPEAR TO HAVE EXCESSIVE INCLUSIONS, POROSITIES, CRACKS, AND INCOMPLETE PENETRATIONS AS DESCRIBED BY AWS D1.1 OR HAVE THE QUESTIONABLE WELD REMOVED AND REWELDED.	PERIODIC	AWS-UT-2
	4. PERFORM OBSERVATION ON THE FIRST TWO WELDS INSTALLED BY EACH WELDER AND SUBSEQUENT NON-DESTRUCTIVE TESTING ACCORDING TO AWS D1.1 ON ALL (100%) COMPLETE PENETRATION AND/OR PARTIAL PENETRATION GROOVE WELDS AND ON ALL SPLICES OF MAIN MEMBERS WHERE THOSE SPLICES ARE REQUIRED. a. CONFIRM JOINT PREPARATION. b. CONFIRM DIMENSIONS (ALIGNMENT, ROOT OPENING, ROOT FACE, AND BEVEL). c. CONFIRM CLEANLINESS OF WELDS AND BASE MATERIAL (CONDITION OF STEEL SURFACES). d. CONFIRM TACKING (TACK WELD QUALITY AND LOCATION). e. CONFIRM BACKING TYPE AND FIT (AS APPLICABLE) AND REMOVAL SUBSEQUENT TO WELD PLACEMENT. f. PERFORM ULTRASONIC TESTING IN ACCORDANCE WITH AWS D.1.1 FOR STEEL MATERIAL 5/16" THICK AND GREATER. FOR THINNER MATERIAL, PERFORM VISUAL OBSERVATIONS IN ACCORDANCE WITH AWS D1.1.	CONTINUOUS	CWI, SWSI
	5. OBSERVE AND DOCUMENT REPAIR ACTIVITIES.	PERIODIC	CWI, SWSI

STRUCTURAL SPECIAL INSPECTIONS CONTINUED ON SHEET S-1-4

FAILURE TO ABIDE BY DESIGN PROFESSIONAL'S INSPECTION REQUIREMENTS OR TO OBTAIN GUIDANCE

THE DESIGN PROFESSIONAL IN RESPONSIBLE CHARGE ACTS AS THE OWNER'S REPRESENTATIVE DURING CONSTRUCTION, AND IS NOT RESPONSIBLE FOR THE CONTRACTOR'S FAILURE TO CARRY OUT THE WORK IN ACCORDANCE WITH THE CONTRACT DOCUMENTS. THE DESIGN PROFESSIONAL IN RESPONSIBLE CHARGE DOES NOT HAVE CONTROL OVER OR CHARGE OF AND IS NOT RESPONSIBLE FOR CONSTRUCTION MEANS, METHODS, TECHNIQUES, SEQUENCES OR PROCEDURES, OR FOR SAFETY PRECAUTIONS AND PROGRAMS IN CONNECTION WITH THE WORK, NOR FOR ANY CONTRACTOR'S FAILURE TO CARRY OUT THE WORK IN ACCORDANCE WITH THE CONTRACT DOCUMENTS. THE DESIGN PROFESSIONAL IN RESPONSIBLE CHARGE DOES NOT GUARANTEE THE PERFORMANCE OF THE CONTRACTOR AND HAS NO CONTROL OVER OR RESPONSIBILITY FOR THE CONTRACTOR'S OR ANY OTHER PERSON'S OR ENTITY'S NUMERICAL OR OTHER ERRORS OR OMISSIONS IN THEIR PERFORMANCE OF THE CONSTRUCTION WORK. THE DESIGN PROFESSIONAL IN RESPONSIBLE CHARGE SHALL NOT BE RESPONSIBLE FOR THE ACTS OR OMISSIONS OF THE CONTRACTOR OR ANY OTHER PERSON OR ENTITY PERFORMING ANY OF THE CONSTRUCTION WORK. THE DESIGN PROFESSIONAL IN RESPONSIBLE CHARGE SHALL NOT BE RESPONSIBLE FOR THE CONTRACTOR'S FAILURE TO PERFORM THE CONSTRUCTION WORK IN ACCORDANCE WITH THE CONTRACT DOCUMENTS. THE DESIGN PROFESSIONAL IN RESPONSIBLE CHARGE SHALL BE RESPONSIBLE ONLY FOR THE DESIGN PROFESSIONAL'S OWN NEGLIGENT ACTS OR OMISSIONS, OR FAILURE TO PERFORM AS REQUIRED IN THE CONTRACT DOCUMENTS FOR THE DESIGN PROFESSIONAL'S PROFESSIONAL SERVICES. THE DESIGN PROFESSIONAL IN RESPONSIBLE CHARGE SHALL NOT BE RESPONSIBLE FOR THE ACTS OR OMISSIONS OF ANY OTHER PERSONS PERFORMING ANY OF THE CONSTRUCTION WORK, OR FOR THE FAILURE OF ANY OTHER PERSONS TO CARRY OUT CONSTRUCTION WORK IN ACCORDANCE WITH THE CONTRACT DOCUMENTS. ANY CONTRACTOR OR OTHER PERSON OR ENTITY PERFORMING CONSTRUCTION WORK THAT IS NOT IN ACCORDANCE WITH THE CONTRACT DOCUMENTS SHALL NOT BE RELIEVED OF ANY OBLIGATION TO PERFORM THE CONSTRUCTION WORK IN ACCORDANCE WITH THE CONTRACT DOCUMENTS. THE DESIGN PROFESSIONAL IN RESPONSIBLE CHARGE SHALL NOT BE RESPONSIBLE FOR ANY CONSTRUCTION WORK PERFORMED INCONSISTENTLY WITH THE CONTRACT DOCUMENTS. THE DESIGN PROFESSIONAL IN RESPONSIBLE CHARGE SHALL NOT BE RESPONSIBLE FOR ANY CONSTRUCTION WORK PERFORMED WITHOUT THE DESIGN PROFESSIONAL'S KNOWLEDGE. THE DESIGN PROFESSIONAL IN RESPONSIBLE CHARGE SHALL NOT BE RESPONSIBLE FOR ANY CONSTRUCTION WORK PERFORMED INCONSISTENTLY WITH THE DESIGN PROFESSIONAL'S GUIDANCE WITH RESPECT TO THE CONSTRUCTION WORK. ANY CONSTRUCTION WORK PERFORMED INCONSISTENTLY WITH THE DESIGN PROFESSIONAL'S GUIDANCE WITH RESPECT TO THE CONSTRUCTION WORK SHALL BE REJECTED.

BROWN+KUBICAN
STRUCTURAL ENGINEERS
8900 Greeneway Commons Pl #201
Louisville, KY 40220
502-749-2061
www.brownkubican.com

IT IS A VIOLATION OF LAW FOR ANY PERSON TO ALTER THIS DRAWING WITHOUT WRITTEN PERMISSION FROM KENTUCKY ENGINEERING GROUP, PLLC AND ACTING UNDER THE DIRECTION OF A LICENSED ENGINEER.

THIS DRAWING WAS PREPARED AT THE SCALE INDICATED. INACCURACIES IN THE STATED SCALE MAY BE INTRODUCED WHEN DRAWINGS ARE REPRODUCED BY ANY MEANS. USE THE GRAPHIC SCALE BAR IN THE DRAWING OR TITLE BLOCK TO DETERMINE THE ACTUAL SCALE.

NO.	DATE	REVISIONS	BY

DATE:	2/16/26
PROJECT MGR:	JAB
DRAWN BY	SWC
CHECKED BY	JAB
SCALE:	AS NOTED

2022 © Kentucky Engineering Group, PLLC

P.O. Box 1034
VERSAILLES, KENTUCKY 40383
KENTUCKY ENGINEERING GROUP, PLLC

WATER TREATMENT PLANT
GAC FACILITY
FOR THE
CITY OF CYNTHIANA

STRUCTURAL SPECIAL INSPECTIONS



PROJECT NO.
25009

SHEET NO.
S-1-3

STRUCTURAL SPECIAL INSPECTIONS CHART

COMPONENT	TEST OR SPECIAL INSPECTION	PERIODIC OR CONTINUOUS	ACCEPTABLE QUALIFICATIONS
MICROPILE/ROCK ANCHORS FOUNDATIONS (IBC 1705.9)	PROVIDE SPECIAL INSPECTION OF THE FABRICATION OF DRIVEN STRUCTURAL ELEMENTS AND ASSEMBLIES IN ACCORDANCE WITH THE FABRICATORS SECTION IN THIS CHART.		
	PROVIDE SPECIAL INSPECTION OF THE FABRICATION OF PILE ELEMENTS AND ASSEMBLIES IN ACCORDANCE WITH THE FABRICATORS SECTION IN THIS CHART.	- - - -	
	PROVIDE INSPECTION OF PILE INSTALLATIONS.	CONTINUOUS	SSI, NICET-2S
	OBSERVE AND DOCUMENT LOAD TESTING. TESTING SHALL BE PERFORMED BY THE MICROPILE INSTALLATION CONTRACTOR.	CONTINUOUS	SSI, NICET-2S
	PREPARE A REPORT FOR EACH PILE AS FOLLOWS: 1. DATE AND TIME OF INSTALLATION. 2. NAME AND MODEL OF INSTALLATION EQUIPMENT. 3. LOCATION OF PILE. 4. ACTUAL PILE TYPE AND CONFIGURATION - INCLUDING LEAD SECTION, NUMBER AND TYPE OF EXTENSION SECTIONS (MANUFACTURER'S SKU NUMBERS). 5. PILE INSTALLATION DURATION AND OBSERVATIONS. 6. TOTAL LENGTH OF INSTALLED PILE FOUNDATION. 7. CUTOFF ELEVATION. 8. INCLINATION OF PILE. 9. GROUT QUANTITIES PULLED DOWN PER SECTION BASIS. 10. ACTUAL GROUT COLUMN DIAMETER AND LENGTH 11. COMMENTS PERTAINING TO INTERRUPTIONS, OBSTRUCTIONS OR OTHER RELEVANT INFORMATION. 12. DOCUMENTATION OF PILE LOAD TESTING PROCEDURES AND RESULTS.	CONTINUOUS	SSI, NICET-2S
	MONITOR GROUT QUALITY BY MEANS OF SITE AND LABORATORY TESTS. THE INSPECTION AGENCY IS AUTHORIZED TO REJECT PLASTIC GROUT NOT CONFORMING TO SPECIFICATIONS. IMMEDIATELY INFORM THE CONTRACTOR, THE ARCHITECT AND THE STRUCTURAL ENGINEER OF INADEQUACIES IN GROUT QUALITY. SAMPLING AND TESTING FOR QUALITY CONTROL DURING GROUT PLACEMENT SHALL INCLUDE THE FOLLOWING: 1. GROUT TEST: ONE SET OF SIX (6) 2-INCH BY 2-INCH CUBES MADE EACH DAY GROUT IS PLACED. A SET SHALL CONSIST OF TWO CUBES TO BE BROKEN AFTER 24 HOURS, TWO CUBES TO BE BROKEN AT 7 DAYS, AND TWO CUBES TO BE BROKEN AT 28 DAYS. TEST CUBES SHALL BE MADE AND TESTED IN ACCORDANCE WITH ASTM C109, WITH THE EXCEPTION THAT THE GROUT MAY BE RESTRAINED FROM EXPANSION BY A TOP PLATE AS REQUIRED BY TESTING AGENCY TO OBTAIN ACCURATE TESTS. 2. GROUT TEMPERATURE: ASTM C 1064: ONE TEST HOURLY WHEN AIR TEMPERATURE IS 40 DEG F (4 DEG C) AND BELOW, WHEN 80 DEG F (27 DEG C) AND ABOVE, AND ONE TEST FOR EACH SET OF COMPRESSIVE-STRENGTH SPECIMENS. 3. FLOW-CONE TEST: VERIFY QUANTITY OF WATER TO PRODUCE A GROUT HAVING A CONSISTENCY OF FLOW OF NOT LESS THAN 22 SECONDS WHEN TESTED WITH A FLOW CONE IN ACCORDANCE WITH CORPS OF ENGINEERS CRD C-79.	CONTINUOUS	SSI, NICET-2S
AGGREGATE PIERS	PERFORM INSPECTION TO VERIFY MATERIALS, SIZES, LENGTHS, SPACINGS, AND INSTALLATION PROCEDURES COMPLY WITH THE REQUIREMENTS IN THE APPROVED SUBMITTAL.	CONTINUOUS	SSI, NICET-2S
	PREPARE A REPORT FOR EACH VIBRATORY STONE COLUMN AS FOLLOWS: 1. DATE AND TIME OF INSTALLATION. 2. NAME AND MODEL OF INSTALLATION EQUIPMENT. 3. LOCATION OF EACH COLUMN. 4. TOP AND BOTTOM ELEVATIONS FOR EACH COLUMN. 5. DIAMETER FOR EACH COLUMN. 6. AGGREGATE SIZE/GRADATION. 7. COMMENTS PERTAINING TO INTERRUPTIONS, OBSTRUCTIONS OR OTHER RELEVANT INFORMATION.	CONTINUOUS	SSI, NICET-2S

NOTES ON SPECIAL INSPECTIONS CHART:

1. REFER TO 014110 SPECIFICATION FOR ADDITIONAL REQUIREMENTS AND RESPONSIBILITIES.
2. SPECIAL INSPECTIONS AS DEFINED IN SECTIONS 1704 AND 1705 OF THE KENTUCKY BUILDING CODE ARE REQUIRED. ALL REFERENCES SHOWN ARE TO THE KBC 2018 / IBC 2015.
3. SPECIAL INSPECTIONS SHALL BE PERFORMED BY A QUALIFIED TESTING AGENCY APPROVED BY THE ARCHITECT AND THE STRUCTURAL ENGINEER AND PAID FOR BY THE OWNER.
4. THE INSPECTOR SHALL OBSERVE WORK FOR CONFORMANCE WITH THE APPROVED STRUCTURAL DRAWINGS AND SPECIFICATIONS AND PREPARE INSPECTION REPORTS STATING THEIR OBSERVATIONS. COPIES OF THE INSPECTION REPORTS SHALL BE SUBMITTED TO THE CONTRACTOR, THE ARCHITECT AND THE STRUCTURAL ENGINEER.
5. ALL DISCREPANCIES BETWEEN THE CONSTRUCTION DOCUMENTS AND THE WORK BEING PERFORMED SHALL BE BROUGHT TO THE IMMEDIATE ATTENTION OF THE CONTRACTOR FOR CORRECTION. IF THE DISCREPANCIES ARE NOT CORRECTED, THE DISCREPANCIES SHALL BE BROUGHT TO THE ATTENTION OF ARCHITECT AND THE STRUCTURAL ENGINEER PRIOR TO THE COMPLETION OF THAT PHASE OF THE WORK.
6. THE SPECIAL INSPECTOR SHALL SUBMIT A FINAL REPORT OF INSPECTIONS DOCUMENTING COMPLETION OF ALL REQUIRED SPECIAL INSPECTIONS AND CORRECTION OF ANY DISCREPANCIES NOTED IN THE INSPECTIONS.
7. NON-STRUCTURAL SPECIAL INSPECTIONS MAY BE REQUIRED AND ARE SPECIFIED ELSEWHERE IF APPLICABLE.

DESIGNATION	REQUIRED CERTIFICATION
ACI-2	ACI CERTIFIED CONCRETE FIELD TESTING TECHNICIAN LEVEL 2, PLUS 2-YEARS' RELATED EXPERIENCE
NICET-1	NICET LEVEL 1, MINIMUM 2-YEARS' RELATED EXPERIENCE
NICET-2C	CURRENT NICET CONCRETE LEVEL II CERTIFICATION PLUS 4-YEARS' RELATED EXPERIENCE
NICET-2S	CURRENT NICET SOILS LEVEL II CERTIFICATION PLUS 4-YEARS' RELATED EXPERIENCE
PE	PROFESSIONAL ENGINEER WITH MINIMUM OF 8-YEARS' EXPERIENCE, LICENSED IN THE PROJECT STATE, WHOSE PRINCIPAL WORK EXPERIENCE HAS BEEN IN THE DESIGN OF BUILDING STRUCTURES
RCSI	ICC CERTIFIED REINFORCED CONCRETE SPECIAL INSPECTOR
SMSI	ICC CERTIFIED STRUCTURAL MASONRY SPECIAL INSPECTOR
SSI	ICC CERTIFIED SOILS SPECIAL INSPECTOR
SSSI	ICC CERTIFIED STRUCTURAL STEEL & BOLTING SPECIAL INSPECTOR
SWSI	ICC CERTIFIED STRUCTURAL WELDING SPECIAL INSPECTOR

BROWN+KUBICAN
STRUCTURAL ENGINEERS
8900 Greeneway Commons Pl #201 Louisville, KY 40220
502-749-2061 www.brownkubican.com

FAILURE TO ABIDE BY DESIGN PROFESSIONAL'S PLANS OR TO OBTAIN GUIDANCE

THE DESIGN PROFESSIONAL IN RESPONSIBLE CHARGE ACTS AS THE OWNER'S REPRESENTATIVE DURING CONSTRUCTION, AND IS THE PERSON RETAINED BY THE OWNER WHO HAS THE AUTHORITY AND RESPONSIBILITY TO ENFORCE COMPLIANCE WITH THE CONSTRUCTION DOCUMENTS. THE DESIGN PROFESSIONAL IN RESPONSIBLE CHARGE AND THE ENGINEER OF RECORD FOR EACH DISCIPLINE ARE NOT RESPONSIBLE FOR CONSTRUCTION MEANS, METHODS, TECHNIQUES, SEQUENCES OR PROCEDURES, OR FOR SAFETY PRECAUTIONS AND PROGRAMS IN CONNECTION WITH THE WORK, AND WILL NOT BE RESPONSIBLE FOR THE CONTRACTOR'S FAILURE TO CARRY OUT THE WORK IN ACCORDANCE WITH THE CONTRACT DOCUMENTS. THE DESIGN PROFESSIONAL'S PLANS AND SPECIFICATIONS MIGHT NOT ADDRESS EVERY DETAIL, OMISSIONS FROM THE PLANS AND SPECIFICATIONS MIGHT NOT BE CONSIDERED BY THE DESIGN PROFESSIONAL TO BE MATERIAL. THE DESIGN PROFESSIONAL'S PLANS AND SPECIFICATIONS MIGHT IN SOME INSTANCES REQUIRE IMPROVED QUALITY OR INCREASED CONTRACTOR'S PERFORMANCE. THE DESIGN PROFESSIONAL'S PLANS AND SPECIFICATIONS MIGHT ONLY INDICATE THE MINIMUM ACCEPTABLE STANDARDS. THE DESIGN PROFESSIONAL'S PLANS AND SPECIFICATIONS ARE NOT INTENDED TO BE EXHAUSTIVE OR COMPREHENSIVE. THE CONTRACTOR IS OBLIGATED TO COMPLY WITH ALL LAWS, CODES, ORDINANCES, REGULATIONS, AND INDUSTRY STANDARDS. THE CONTRACTOR IS RESPONSIBLE FOR THE JOB SITE CONDITIONS DURING THE COURSE OF CONSTRUCTION, INCLUDING SAFETY OF ALL PERSONS AND PROPERTY. THE CONTRACTOR IS RESPONSIBLE FOR ALL CONSTRUCTION MEANS, METHODS, TECHNIQUES, SEQUENCES AND PROCEDURES. THE CONTRACTOR IS RESPONSIBLE FOR ALL CONSTRUCTION PERFORMED BY THE CONTRACTOR AND ALL SUBCONTRACTORS. THE CONTRACTOR IS RESPONSIBLE FOR ALL CONSTRUCTION PERFORMED BY THE CONTRACTOR AND ALL SUBCONTRACTORS. THE CONTRACTOR IS RESPONSIBLE FOR ALL CONSTRUCTION PERFORMED BY THE CONTRACTOR AND ALL SUBCONTRACTORS. THE CONTRACTOR IS RESPONSIBLE FOR ALL CONSTRUCTION PERFORMED BY THE CONTRACTOR AND ALL SUBCONTRACTORS.

IT IS A VIOLATION OF LAW FOR ANY PERSON TO ALTER THIS DRAWING WITHOUT WRITTEN PERMISSION FROM KENTUCKY ENGINEERING GROUP, PLLC AND ACTING UNDER THE DIRECTION OF A LICENSED ENGINEER.

THIS DRAWING WAS PREPARED AT THE SCALE INDICATED. INACCURACIES IN THE STATED SCALE MAY BE INTRODUCED WHEN DRAWINGS ARE REPRODUCED BY ANY MEANS. USE THE GRAPHIC SCALE BAR IN THE DRAWING OR TITLE BLOCK TO DETERMINE THE ACTUAL SCALE.

NO.	DATE	REVISIONS	BY

DATE:	2/16/26
PROJECT MGR:	JAB
DRAWN BY	SWC
CHECKED BY	JAB
SCALE:	AS NOTED

2022 © Kentucky Engineering Group, PLLC

P.O. Box 1034
VERSAILLES, KENTUCKY 40383
KENTUCKY ENGINEERING GROUP, PLLC

WATER TREATMENT PLANT
GAC FACILITY
FOR THE
CITY OF CYNTHIANA

STRUCTURAL SPECIAL INSPECTIONS



PROJECT NO.
25009

SHEET NO.
S-1-4

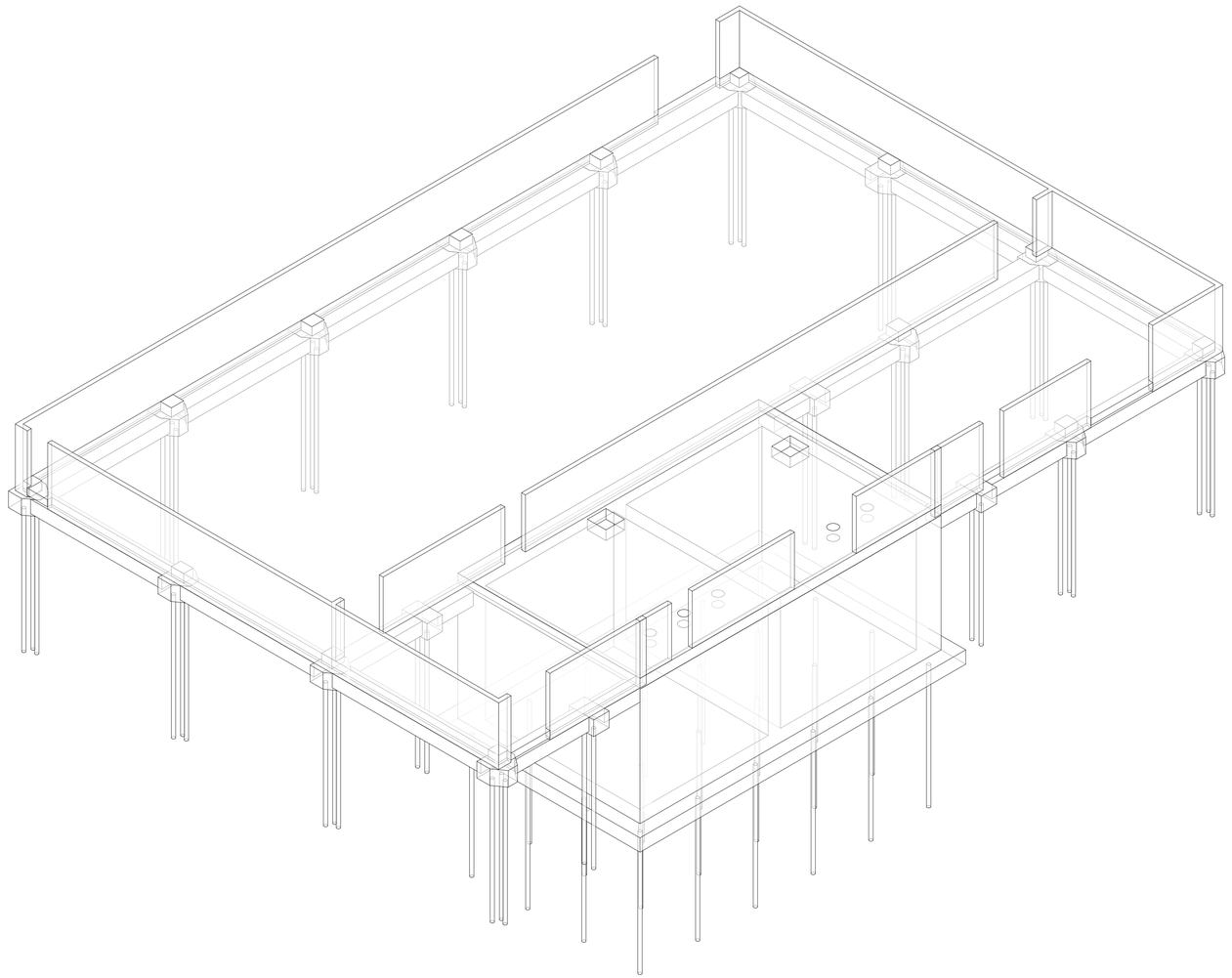

NOTE:
3D VIEWS SHOWN ON THIS SHEET ARE FOR REFERENCE ONLY.
3D STRUCTURAL MODEL IS NOT GUARANTEED TO BE COMPLETE OR EXACT.
SEE ALL OTHER SHEETS FOR ACCURATE STRUCTURAL PLANS AND DETAILS.

FAILURE TO ABIDE BY DESIGN DOCUMENTS OR TO OBTAIN GUIDANCE

THE DESIGN PROFESSIONAL WAIVES ANY AND ALL RESPONSIBILITY AND LIABILITY FOR PROBLEMS WHICH ARISE FROM FAILURE TO FOLLOW THESE PLANS, SPECIFICATIONS AND THE DESIGN INTENT THEY CONVEY, OR FOR PROBLEMS WHICH ARISE FROM OTHERS' FAILURE TO OBTAIN AND/OR FOLLOW THE DESIGN PROFESSIONAL'S GUIDANCE WITH RESPECT TO ANY ERRORS, OMISSIONS, INCONSISTENCIES, AMBIGUITIES OR CONFLICTS WHICH ARE ALLEGED.

BROWN+KUBICAN
STRUCTURAL ENGINEERS
8900 Greeneway Commons Pl #201
Louisville, KY 40220
502-749-2061
www.brownkubican.com

IT IS A VIOLATION OF LAW FOR ANY PERSON TO ALTER THIS DRAWING WITHOUT WRITTEN PERMISSION FROM KENTUCKY ENGINEERING GROUP, PLLC AND ACTING UNDER THE DIRECTION OF A LICENSED ENGINEER.

THIS DRAWING WAS PREPARED AT THE SCALE INDICATED. INACCURACIES IN THE STATED SCALE MAY BE INTRODUCED WHEN DRAWINGS ARE REPRODUCED BY ANY MEANS. USE THE GRAPHIC SCALE BAR IN THE DRAWING OR TITLE BLOCK TO DETERMINE THE ACTUAL SCALE.

NO.	DATE	REVISIONS	BY

DATE:	2/16/26
PROJECT MGR:	JAB
DRAWN BY	SWC
CHECKED BY	JAB
SCALE:	AS NOTED

2022 © Kentucky Engineering Group, PLLC

P.O. Box 1034
VERSAILLES, KENTUCKY 40383
KENTUCKY ENGINEERING GROUP, PLLC

WATER TREATMENT PLANT
GAC FACILITY
FOR THE
CITY OF CYNTHIANA

STRUCTURAL SPECIAL INSPECTIONS

STATE OF KENTUCKY
JASON ALLEN BUSH
27320
LICENSED PROFESSIONAL ENGINEER
© BROWN + KUBICAN, PSC
2/16/26

PROJECT NO.
25009

SHEET NO.
S-1-5

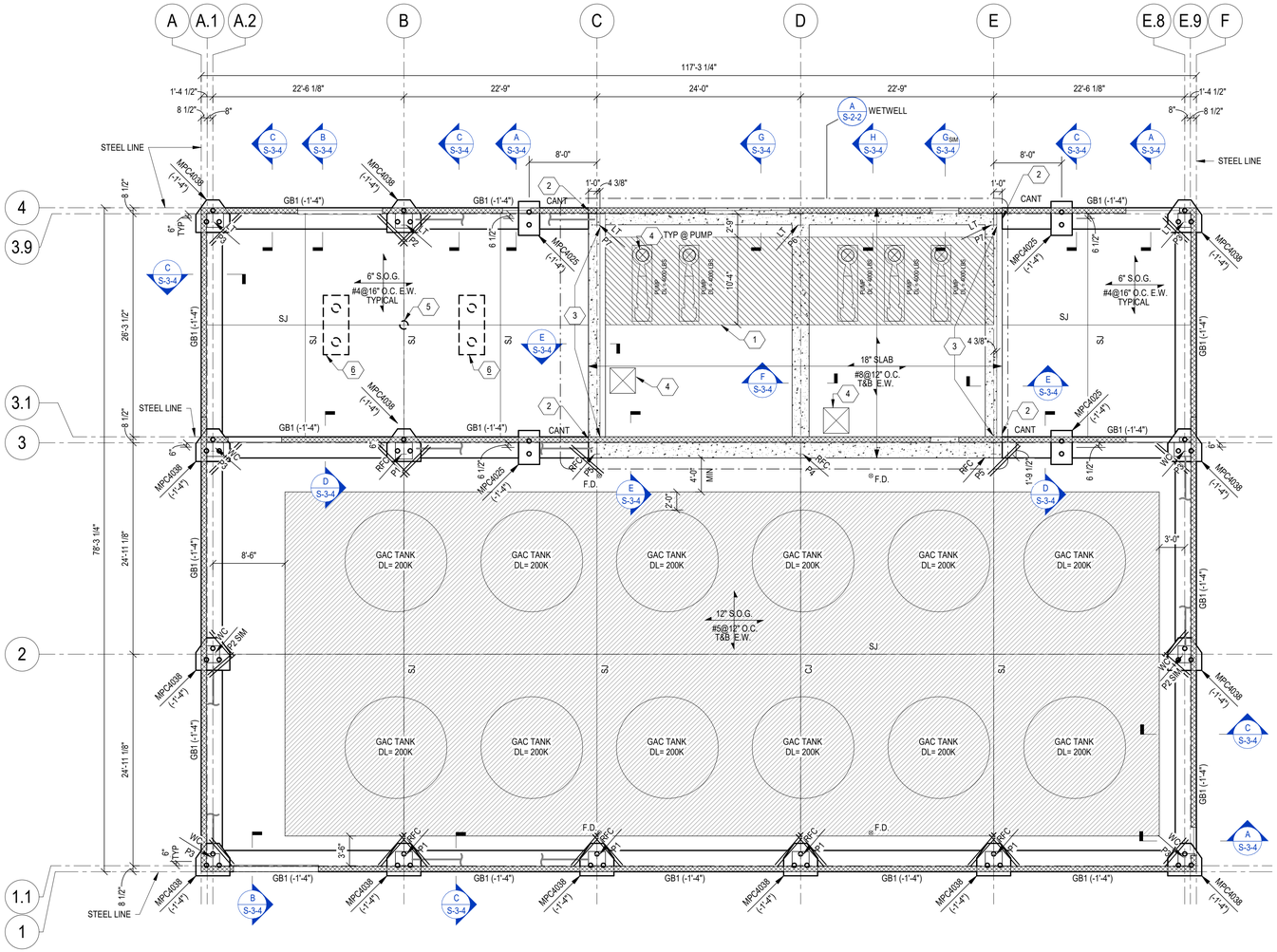

A S-2-1 FOUNDATION PLAN

1/8" = 1'-0"

PROJECT

N W E S

SUGGESTED SEQUENCING NOTES

1. CONTRACTOR SHALL:
   A. EXCAVATE FOR TANK FOUNDATION SLAB
   B. INSTALL ROCK ANCHORS AND POUR TANK SLAB AND WALLS BEFORE BACKFILLING.
   C. INSTALL MICROPILES, MICROPILE CAPS, GRADE BEAMS FOR PEMB.
   D. INSTALL THE RAMMED AGGREGATE PIERS
   E. POUR THE SLABS ON GRADE.

IMPORTANT PEMB NOTES:

1. UNLESS SPECIFICALLY NOTED OTHERWISE, ALL STRUCTURAL STEEL ELEMENTS REQUIRED FOR A COMPLETE BUILDING STRUCTURE SHALL BE DESIGNED, SUPPLIED, AND INSTALLED BY THE PEMB CONTRACTOR.
2. COLUMN FOOTINGS SHALL BE CENTERED ON STEEL COLUMN CENTERLINES. STEEL COLUMN CENTERLINES SHALL BE DETERMINED BY PEMB CONTRACTOR UNLESS OTHERWISE NOTED. FOUNDATION CONTRACTOR SHALL COORDINATE.
3. DO NOT INSTALL FOOTINGS OR FABRICATE REBAR UNTIL PEMB SHOP DRAWINGS HAVE BEEN SUBMITTED, REVIEWED, AND APPROVED. FOOTINGS SHOWN SHALL BE USED FOR BASE BID. HOWEVER, THEY ARE DESIGNED BASED ON ESTIMATED PEMB REACTIONS. PEMB SUPPLIER SHALL PROVIDE SHOP DRAWINGS WITH BUILDING.
4. CONCRETE CONTRACTOR SHALL SUPPLY ANCHOR BOLTS AND HARDWARE FOR PEMB ATTACHMENT TO THE FOUNDATION. CONCRETE FOUNDATION INSTALLER SHALL INSTALL ANCHOR BOLTS FOR PEMB ATTACHMENT TO THE FOUNDATION. ANCHOR BOLT DIAMETER AND LAYOUT SHALL BE DESIGNED BY THE PEMB MANUFACTURER AND COORDINATED BY THE GENERAL CONTRACTOR. SEE DET C/S-3-1 FOR TYPICAL ANCHOR BOLT DETAIL.
5. SEE ARCH DWGS FOR PEMB ELEMENT ELEVATIONS AND LOCATIONS THAT ARE NOT SHOWN ON STRUCTURAL DWGS.
6. SEE ARCH DWGS AND SPECIFICATIONS FOR INFORMATION ABOUT ROOF DECK AND METAL WALL PANELS.
7. PURLINS AND WIND GIRT SPACING AND QUANTITY ARE NOT SHOWN ON STRUCTURAL DWGS AND SHALL BE PER PEMB DESIGN.
8. ROOFING SHALL BE DESIGNED AND SUPPLIED BY PEMB MANUFACTURER. ROOFING SHALL BE INSTALLED BY PEMB INSTALLER.
9. ROOF DIAPHRAGM BRACING IS REQUIRED AS DESIGNED BY PEMB SUPPLIER.

FOUNDATION PLAN NOTES

1. ELEVATIONS SHOWN ARE TO THE TOP OF THE FOUNDATION AND ARE REFERENCED FROM FINISHED FIRST FLOOR REFERENCE ELEVATION (0'-0").
2. CENTER ALL WALL FOOTINGS ON WALL CENTERLINE U.N.O.
3. CENTER ALL MICROPILE CAPS ON COLUMN GRID INTERSECTION U.N.O.
4. SEE DWG S-1-1 & S-1-2 FOR GENERAL NOTES.
5. SEE DWG S-1-3 & S-1-4 FOR STRUCTURAL SPECIAL INSPECTION NOTES.
6. SEE DWGS S-3-1 TO S-3-3 FOR TYPICAL FOUNDATION DETAILS.
7. SLAB ON GRADE SHALL BE PLACED ON VAPOR RETARDER (SEE SPECIFICATIONS) OVER 6" MINIMUM OPEN GRADED STONE BASE.
8. REINFORCE SLABS ON GRADE AT RE-ENTRANT CORNERS PER DET C/S-3-3 REINFORCING BARS MAY NOT BE SHOWN GRAPHICALLY ON PLAN IN ALL LOCATIONS.
9. PROVIDE CONSTRUCTION JOINTS IN SLAB ON GRADE ALIGNING WITH BOTH FACES OF C.M.U. WALLS AT OPENINGS IN INTERIOR LOAD-BEARING WALLS.
10. ALL SLABS ON GRADE SHALL BE SUPPORTED ON UNDISTURBED SOIL CAPABLE OF SUPPORTING DESIGN LOADS WITHOUT APPRECIABLE SETTLEMENT. CONTRACTOR SHALL PROBE BEARING STRATA WITH DRIVEN RODS, REMOVE SHALLOW BEDROCK AND OBSTRUCTIONS (AND OVERLYING SOIL) WITHIN ONE FOOT BELOW SLAB SUBGRADE ELEVATION, AND REPLACE WITH ENGINEERED SOIL OR D.G.A. BACKFILL. SLABS ON GRADE SHALL NOT BEAR ON EXISTING UNDOCUMENTED FILL MATERIAL OR EXISTING FAT CLAY. CONTRACTOR SHALL REMOVE SHALLOW FILL TO A MINIMUM OF TWO FEET BELOW SLAB SUBGRADE ELEVATION AND REPLACE WITH ENGINEERED SOIL OR D.G.A BACKFILL. CONTRACTOR SHALL PROOFROLL SUBGRADE TO ENSURE ADEQUACY OF SUBGRADE PRIOR TO FILLING. CONTRACTOR SHALL REMOVE FAT CLAY WITHIN TWO FEET BELOW SLAB SUBGRADE ELEVATION AND REPLACE WITH ENGINEERED SOIL OR D.G.A BACKFILL.
11. ALL MICROPILES MUST BE SUPPORTED INTO BEDROCK.

FOUNDATION LEGEND

- P1 = COLUMN PIER. SEE DET A/S-3-3
- (-0'-8") = TOP OF FOOTING ELEVATION.
- SJ = SAWN CONTRACTION JOINT. SEE DET B/S-3-1
- CJ = CONSTRUCTION JOINT. SEE DET B/S-3-1
- = DIAGONAL BRACING. SEE FINAL PEMB DRAWINGS.
- = C.M.U. WALL REINFORCED W/ #5@48" O.C. VERT CENTERED IN CORE.
- = CONCRETE WALL.
- = MASONRY NON-BEARING PARTITION WALL. SEE ARCH DWGS FOR WALL THICKNESS, TYPE AND LAYOUT.
- RFC = RIGID FRAME COLUMN. SEE PEMB DWGS.
- WC = WIND COLUMN. SEE PEMB DWGS.
- LT = LEAN-TO COLUMN. SEE PEMB DWGS.
- GB1 = GRADE BEAM. SEE DET C/S-3-2.
- MPC4038 = MICROPILE CAP SEE DET D/S-3-2 .
- CANT = CANTILEVERED GRADE BEAM. SEE DET C/S-3-2.
- = RAMMED AGGREGATE PIER SOIL IMPROVEMENT W/ AN ALLOWABLE BEARING PRESSURE OF 3,000 PSF.
- = RE-ENTRANT CORNER REINFORCEMENT. SEE DET C/S-3-3.
- F.D. = FLOOR DRAIN. COORDINATE SIZE & LOCATION WITH PROCESS AND ARCH DWGS. SEE DET D/S-3-3.

FOUNDATION TAG NOTES

1. EXTENTS OF PEMB HUNG 2 TON BRIDGE CRANE ABOVE. COORDINATE WITH ARCH AND PROCESS DWGS. CONTRACTOR SHALL COORDINATE BRIDGE CRANE WITH PEMB CONTRACTOR.
2. ADHESIVE DOWEL LONGITUDINAL REINFORCEMENT INTO CONCRETE WALL (6" EMBED).
3. PEMB CONTRACTOR SHALL INSTALL PARTITION SPANDREL @ TOP OF MASONRY WALL. COORDINATE WITH ARCH DWGS.
4. ADDITIONAL REINFORCEMENT AROUND OPENINGS IN ELEVATED SLAB PER DET E/S-4-1.
5. SUGGESTED TEST PILE FOR 6"ø MICROPILE.
6. POTENTIAL REACTION PILE/CAP (DESIGNED BY CONTRACTOR).

RAM AGGREGATE NOTES

1. HATCHED SLABS ON GRADE SHOWN ON THE STRUCTURAL PLANS MUST BE SUPPORTED ON SOIL IMPROVED BY RAMMED AGGREGATE PIERS CAPABLE OF SUPPORTING DESIGN LOADS WITHOUT APPRECIABLE SETTLEMENT. FOOTINGS HAVE BEEN DESIGNED FOR AN ALLOWABLE BEARING CAPACITY = 3,000 PSF.
2. MAXIMUM SPACING OF RAMMED AGGREGATE PIERS SHALL BE 10 FEET ON-CENTER.
3. RAMMED AGGREGATE PIERS SHOULD BE ANTICIPATED TO BE INSTALLED FROM EXISTING GRADES, PRIOR TO ENGINEERED FILL BEING PLACED, UNLESS COORDINATED OTHERWISE WITH THE G.C. PRIOR TO BID. SEE SUGGESTED SEQUENCING NOTES.
4. SEE AGGREGATE PIER SPECIFICATIONS.

FAILURE TO ABIDE BY DESIGN PROFESSIONAL'S INSTRUCTIONS TO OBTAIN GUIDANCE

THE DESIGN PROFESSIONAL WAIVES ANY AND ALL RESPONSIBILITY AND LIABILITY FOR ANY AND ALL CONSTRUCTION MEANS AND METHODS, INCLUDING BUT NOT LIMITED TO FAILURE TO FOLLOW THESE PLANS. THE CONTRACTOR AND ITS SUBCONTRACTORS OF EVERY TIER SHALL BE RESPONSIBLE WITH RESPECT TO THE WORK THEY PERFORM FOR ANY AND ALL DAMAGES WHICH MAY ARISE FROM OTHERS' FAILURE TO OBTAIN THE DESIGN PROFESSIONAL'S GUIDANCE WHENEVER THE CONTRACTOR DISCOVERS ANY INCONSISTENCIES, AMBIGUITIES OR DISCREPANCIES IN THE PLANS, SPECIFICATIONS OR OTHER CONTRACT DOCUMENTS PREPARED BY THE DESIGN PROFESSIONAL, OR IN THE EVENT THE CONTRACTOR DISCOVERS ANY INCONSISTENCIES, AMBIGUITIES OR DISCREPANCIES BETWEEN THE PLANS, SPECIFICATIONS OR OTHER CONTRACT DOCUMENTS PREPARED BY THE DESIGN PROFESSIONAL AND ANY APPLICABLE LAWS, CODES, RULES OR REGULATIONS, THE CONTRACTOR SHALL IMMEDIATELY REPORT SUCH INCONSISTENCIES, AMBIGUITIES OR DISCREPANCIES TO THE DESIGN PROFESSIONAL BEFORE PROCEEDING WITH THE WORK AFFECTED THEREBY. FAILURE TO DO SO WILL RESULT IN WAIVER OF ALL CLAIMS BY THE CONTRACTOR AGAINST THE DESIGN PROFESSIONAL RELATING TO SUCH INCONSISTENCIES, AMBIGUITIES OR DISCREPANCIES WHICH WERE NOT REPORTED.

BROWN+KUBICAN STRUCTURAL ENGINEERS
8900 Greeneway Commons Pl #201 Louisville, KY 40220
502-749-2061 www.brownkubican.com

IT IS A VIOLATION OF LAW FOR ANY PERSON TO ALTER THIS DRAWING WITHOUT WRITTEN PERMISSION FROM KENTUCKY ENGINEERING GROUP, PLLC AND ACTING UNDER THE DIRECTION OF A LICENSED ENGINEER.

THIS DRAWING WAS PREPARED AT THE SCALE INDICATED. INACCURACIES IN THE STATED SCALE MAY BE INTRODUCED WHEN DRAWINGS ARE REPRODUCED BY ANY MEANS. USE THE GRAPHIC SCALE BAR IN THE DRAWING OR TITLE BLOCK TO DETERMINE THE ACTUAL SCALE.

NO.	DATE	REVISIONS	BY

DATE:	2/16/26
PROJECT MGR:	JAB
DRAWN BY	SWC
CHECKED BY	JAB
SCALE:	AS NOTED

2022 © Kentucky Engineering Group, PLLC

P.O. Box 1034
VERSAILLES, KENTUCKY 40383
KENTUCKY ENGINEERING GROUP, PLLC

WATER TREATMENT PLANT
GAC FACILITY
FOR THE
CITY OF CYNTHIANA

FOUNDATION PLAN

STATE OF KENTUCKY · JASON ALLEN BUSH · 27320 · LICENSED PROFESSIONAL ENGINEER · © BROWN + KUBICAN, PSC · 2/16/26

PROJECT NO. 25009

SHEET NO. S-2-1

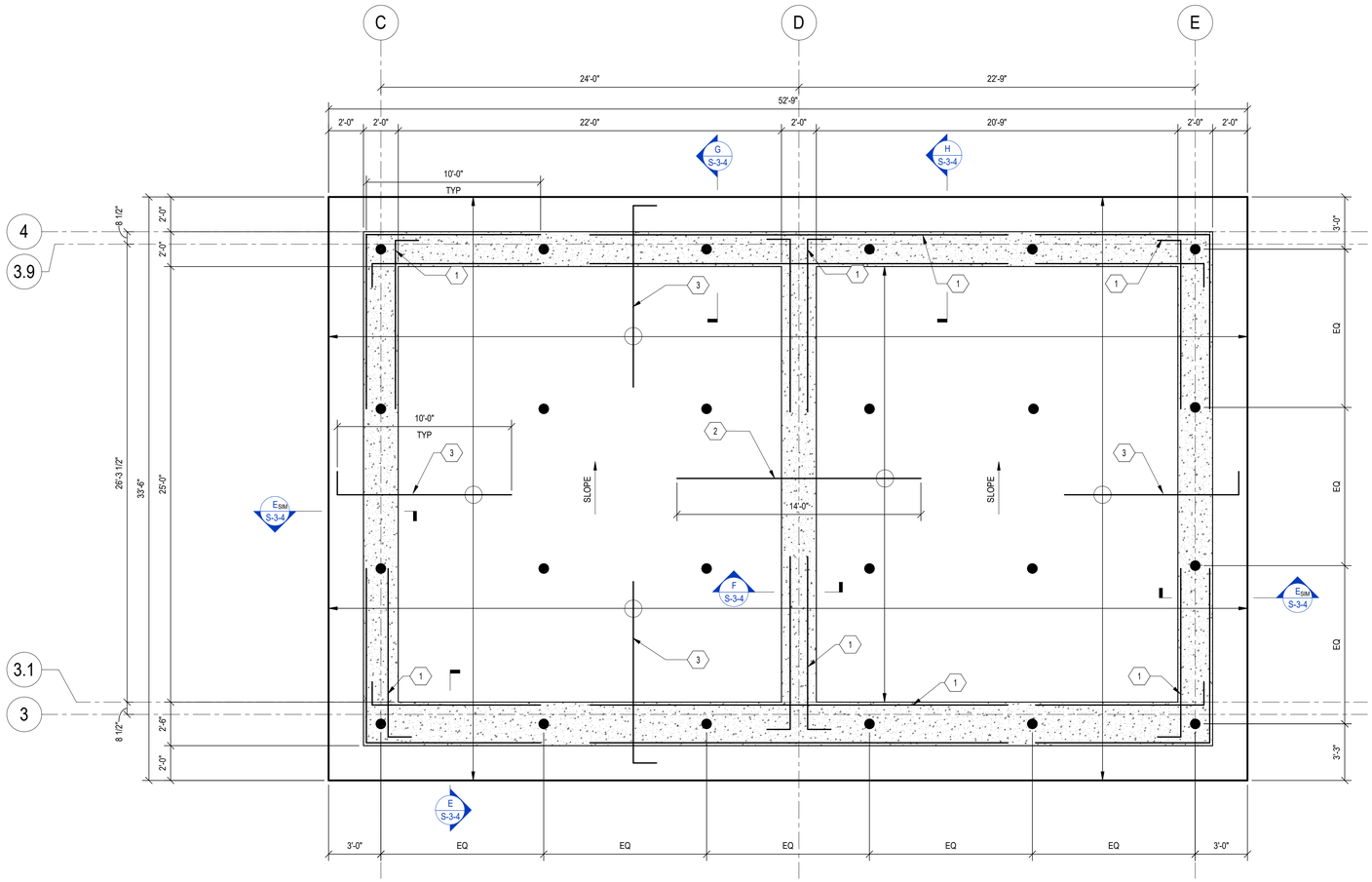

ENVIRONMENTAL CONCRETE STRUCTURE

A S-2-2 ENLARGED FOUNDATION PLAN

1/4" = 1'-0"

FOUNDATION PLAN NOTES

1. ELEVATIONS SHOWN ARE TO THE TOP OF THE FOUNDATION AND ARE REFERENCED FROM FINISHED FIRST FLOOR REFERENCE ELEVATION (0'-0").
2. SEE DWG S-1-1 & S-1-2 FOR GENERAL NOTES.
3. SEE DWG S-1-3 & S-1-4 FOR STRUCTURAL SPECIAL INSPECTION NOTES.
4. SEE DWGS S-3-1 TO S-3-3 FOR TYPICAL FOUNDATION DETAILS.
5. SLAB ON GRADE SHALL BE PLACED ON VAPOR RETARDER (SEE SPECIFICATIONS) OVER 6" MINIMUM OPEN GRADED STONE BASE.
6. REINFORCE SLABS ON GRADE AT RE-ENTRANT CORNERS PER DET C/S-3-3 REINFORCING BARS MAY NOT BE SHOWN GRAPHICALLY ON PLAN IN ALL LOCATIONS.
7. ALL FOOTINGS SHALL BE SUPPORTED ON BEDROCK OR STRUCTURAL FLOWABLE FILL / LEAN CONCRETE PLACED OVER BEDROCK. REMOVE ALL SOIL BETWEEN PROPOSED FOUNDATION AND BEDROCK.
8. SEE CIVIL/SITE DWGS FOR LIQUID LEVEL. WET WELL SHALL RECEIVE LEAK TESTING. SEE SPECIFICATION.
9. WET WELL UPLIFT DESIGN REQUIRES ~1000 KIPS OF TENSION ANCHORAGE TO RESIST NET BUOYANCY FORCE WHEN EMPTY.
10. CONTRACTOR SHALL PROVIDE LINK SEAL IN ALL WALL OPENINGS FOR PIPING. CAST IN PLACE AS NECESSARY. REFER TO CIVIL DRAWINGS FOR QUANTITIES AND LOCATIONS.

FOUNDATION LEGEND

= CONCRETE WALL.

= ROCK ANCHOR. SEE DETAIL A/S-3-2 .

FOUNDATION TAG NOTES

1. ADDITIONAL #8@12" O.C. E.F. IN ADDITION TO FULL LENGTH REINF SHOWN IN SECTIONS.
2. ADDITIONAL #8@12" O.C. CENTERED BELOW WALL T&B IN ADDITION TO FULL LENGTH REINF SHOWN IN SECTIONS.
3. ADDITIONAL #8@12" O.C. T&B IN ADDITION TO FULL LENGTH REINF SHOWN IN SECTION. STAGGER ADDITIONAL BARS IN BETWEEN BASIC FULL LENGTH BARS.

BROWN+KUBICAN
STRUCTURAL ENGINEERS
8900 Greeneway Commons Pl #201 Louisville, KY 40220
502.749.2061 www.brownkubican.com

FAILURE TO ABIDE BY DESIGN PROFESSIONAL'S DIRECTIVES OR TO OBTAIN GUIDANCE

THE DESIGN PROFESSIONAL WAIVES ANY AND ALL RESPONSIBILITY AND LIABILITY FOR ANY AND ALL CONSEQUENCES FROM FAILURE TO FOLLOW THESE PLANS, SPECIFICATIONS AND PROCESSES WHICH THE DESIGN PROFESSIONAL HAS PROVIDED AND ARISE FROM OTHERS' FAILURE TO OBTAIN THE DESIGN PROFESSIONAL'S OR OTHER PROFESSIONAL'S GUIDANCE WITH RESPECT TO ANY AMBIGUITIES, ERRORS, INCONSISTENCIES, AMBIGUITIES OR CONTRADICTIONS ARE ALLEGED.

IT IS A VIOLATION OF LAW FOR ANY PERSON TO ALTER THIS DRAWING WITHOUT WRITTEN PERMISSION FROM KENTUCKY ENGINEERING GROUP, PLLC AND ACTING UNDER THE DIRECTION OF A LICENSED ENGINEER.

THIS DRAWING WAS PREPARED AT THE SCALE INDICATED. INACCURACIES IN THE STATED SCALE MAY BE INTRODUCED WHEN DRAWINGS ARE REPRODUCED BY ANY MEANS. USE THE GRAPHIC SCALE BAR IN THE DRAWING OR TITLE BLOCK TO DETERMINE THE ACTUAL SCALE.

NO.	DATE	REVISIONS	BY

DATE:	2/16/26
PROJECT MGR:	JAB
DRAWN BY	SWC
CHECKED BY	JAB
SCALE:	AS NOTED

2022 © Kentucky Engineering Group, PLLC

P.O. Box 1034
VERSAILLES, KENTUCKY 40383
KENTUCKY ENGINEERING GROUP, PLLC

WATER TREATMENT PLANT
GAC FACILITY
FOR THE
CITY OF CYNTHIANA

TANK FOUNDATION PLAN

STATE OF KENTUCKY
JASON ALLEN BUSH
LICENSED PROFESSIONAL ENGINEER
© BROWN + KUBICAN, INC.
2/16/26

PROJECT NO. 25009

SHEET NO. S-2-2

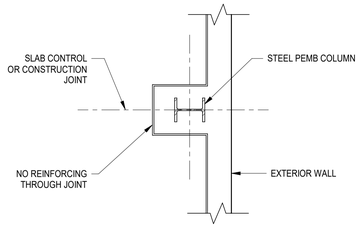

PLAN

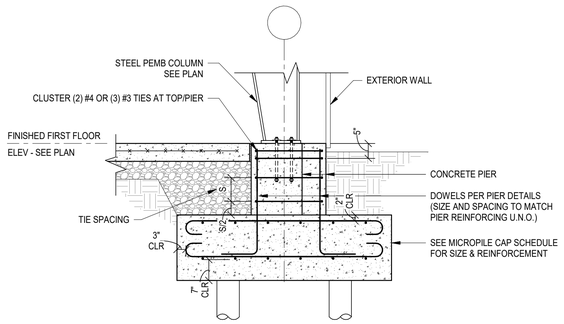

SECTION

A S-3-1 TYPICAL PEMB COLUMN AND FOUNDATION DETAIL

NOT TO SCALE

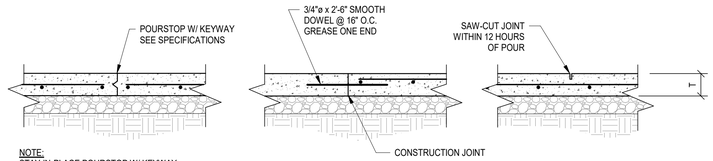

NOTE:
STAY-IN-PLACE POURSTOP W/ KEYWAY MAY BE USED FOR SIMULTANEOUS CONCRETE POURS OF MAXIMUM 30,000 SQ FT AREA OR 200 FT LENGTH.

CONSTRUCTION JOINT

SAWN CONTRACTION JOINT

NOTES:
1. JOINTS SHALL BE INSTALLED IN SLABS ON GRADE AT A MAXIMUM SPACING IN FEET OF 3 TIMES THE SLAB THICKNESS IN INCHES IN EACH DIRECTION BY EITHER OF THE ABOVE METHODS. MAXIMUM LENGTH OF ANY SLAB ON GRADE POUR TO BE 100'-0" BETWEEN CONSTRUCTION JOINTS. RATIO OF LENGTH TO WIDTH SHALL NOT EXCEED 2. THIS SPACING OF JOINTS SHALL APPLY UNLESS SPECIFICALLY SHOWN OTHERWISE.
2. WELDED WIRE FABRIC SHALL BE DISCONTINUOUS THROUGH CONSTRUCTION JOINTS.

NOT FOR ENVIRONMENTAL CONCRETE STRUCTURES

B S-3-1 TYPICAL SLAB ON GRADE JOINT DETAIL

NOT TO SCALE

DIAMETER	E (EMBED)	T	P (PROJECTION)	GRADE	MIN WASHER DIM
1/2" **	4 1/2"	3/4"	SEE P.E.M.B.	36	STD ROUND
5/8"	8"	7/8"	SEE P.E.M.B.	36	3/16" x 1 3/4" x 1 3/4"
3/4"	1'-0"	1"	SEE P.E.M.B.	36	1/4" x 2" x 2"

NOTE:
** 1/2"ø BOLT MAY BE ASTM A307 MACHINE BOLT WITH NUT AND WASHER.

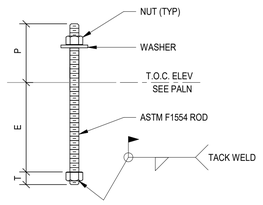

C S-3-1 TYPICAL ANCHOR ROD DETAIL

NOT TO SCALE

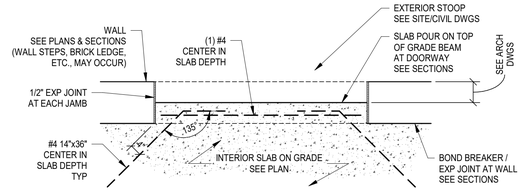

D S-3-1 TYPICAL SLAB ON GRADE REINFORCING AT EXTERIOR DOOR DETAIL

NOT TO SCALE

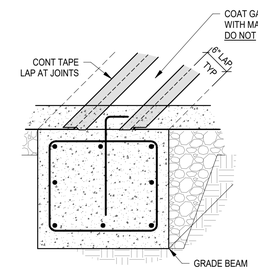

TYPICAL AT INTERIOR GRADE BEAM

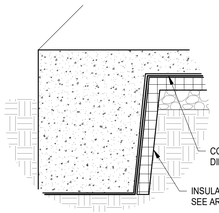

TYPICAL AT TURNED DOWN SLAB

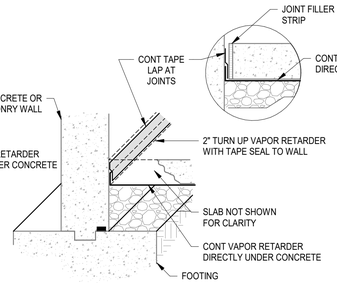

TYPICAL AT WALL

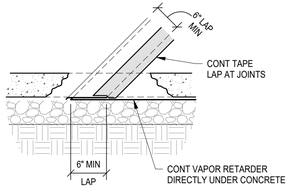

TYPICAL AT SEAM

NOTES:
1. PROVIDE VAPOR RETARDER THAT IS RESISTANT TO DETERIORATION WHEN TESTED ACCORDING TO ASTM E 154. SEE SPECIFICATION SECTION 033000.
2. FOLLOW MANUFACTURER'S RECOMMENDATIONS FOR INSTALLATION.
3. SEAL ALL PENETRATIONS AND REPAIR ALL DAMAGED SURFACES WITH APPROVED JOINT TAPE OR MASTIC.
4. PREPARE ALL SURFACES FOR PROPER ADHESION WITH APPROVED TAPE. ALL SURFACES SHALL BE CLEAN, DRY, AND FROST FREE.
5. TURN UP BARRIER AT ALL EXTERIOR OR INTERIOR WALL SURFACES AND SEAL WITH APPROVED TAPE.

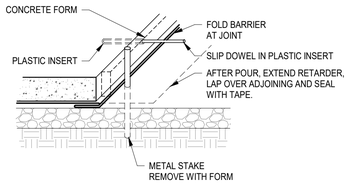

TYPICAL DIVIDED POUR AT CONSTRUCTION JOINT

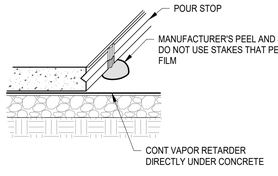

OPTIONAL SIMULTANEOUS POUR AT CONSTRUCTION JOINT

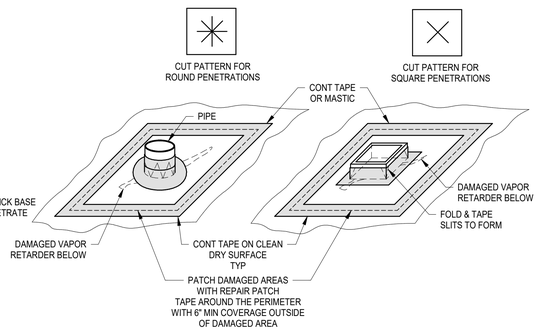

TYPICAL PIPE REPAIR

TYPICAL RECTANGULAR REPAIR

G S-3-1 TYPICAL VAPOR RETARDER DETAILS

NOT TO SCALE

FAILURE TO ABIDE BY DESIGN PROFESSIONAL'S DIRECTIVES OR TO OBTAIN GUIDANCE

THE DESIGN PROFESSIONAL IN PRIVITY WITH OWNER SHALL NOT BE RESPONSIBLE FOR, AND ALL RESPONSIBILITY AND LIABILITY FOR, THE MEANS, METHODS, TECHNIQUES, SEQUENCES AND PROCEDURES IN CONNECTION WITH CONSTRUCTION, AND FOR SAFETY PRECAUTIONS AND PROGRAMS IN CONNECTION WITH THE WORK, AND FOR ANY FAILURE TO FOLLOW THESE PLANS, SPECIFICATIONS AND PROJECT MANUAL, AND FOR ANY FAILURE BY CONTRACTOR TO OBTAIN THE DESIGN PROFESSIONAL'S GUIDANCE WITH RESPECT TO ANY ASPECT OF THE PROJECT WHICH IS UNCLEAR, AMBIGUOUS, INCONSISTENT, OMISSIVE OR CONTRADICTORY. ANY AND ALL CLAIMS ARISING FROM OTHERS' FAILURE TO OBTAIN SUCH GUIDANCE SHALL BE BORNE BY CONTRACTOR WHEN SO FAILING.

BROWN+KUBICAN STRUCTURAL ENGINEERS
8900 Greeneway Commons Pl #201
502-749-2061
Louisville, KY 40220
www.brownkubican.com

IT IS A VIOLATION OF LAW FOR ANY PERSON TO ALTER THIS DRAWING WITHOUT WRITTEN PERMISSION FROM KENTUCKY ENGINEERING GROUP, PLLC AND ACTING UNDER THE DIRECTION OF A LICENSED ENGINEER.

THIS DRAWING WAS PREPARED AT THE SCALE INDICATED. INACCURACIES IN THE STATED SCALE MAY BE INTRODUCED WHEN DRAWINGS ARE REPRODUCED BY ANY MEANS. USE THE GRAPHIC SCALE BAR IN THE DRAWING OR TITLE BLOCK TO DETERMINE THE ACTUAL SCALE.

NO.	DATE	REVISIONS	BY

DATE:	2/16/26
PROJECT MGR:	JAB
DRAWN BY	SWC
CHECKED BY	JAB
SCALE:	AS NOTED
2022 © Kentucky Engineering Group, PLLC	

P.O. Box 1034
VERSAILLES, KENTUCKY 40383
KENTUCKY ENGINEERING GROUP, PLLC

1/18 TAILS

WATER TREATMENT PLANT
GAC FACILITY
FOR THE
CITY OF CYNTHIANA

TYPICAL FOUNDATION DETAILS

STATE OF KENTUCKY JASON ALLEN BUSH 27320 LICENSED PROFESSIONAL ENGINEER © BROWN + KUBICAN, PSC 2/16/26

PROJECT NO. 25009

SHEET NO. S-3-1

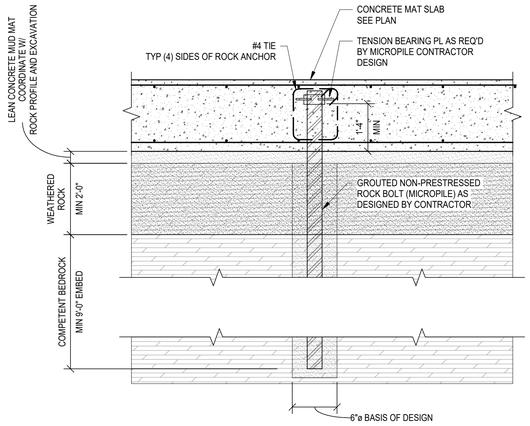

ROCK ANCHOR SCHEDULE

TOP OF PILE LEVEL	TAG	APPROXIMATE PILE LENGTH	ALLOWABLE PILE LOADS		
			COMPRESSION (SAFETY FACTOR = 2)	UPLIFT (SAFETY FACTOR = 3)	SHEAR
BOTTOM OF TANK MAT SLAB	●	3'-0"±	-	50k	-

NOTES:
1. ROCK ANCHOR LENGTHS SHALL BE ADJUSTED BY THE CONTRACTOR AS REQUIRED TO MEET THE ALLOWABLE LOADING REQUIREMENTS.
   BASIS OF DESIGN IS:
   A. 6"ø ± ANCHOR
2. ALL PILE LENGTHS SHOWN IN THE SCHEDULE ARE APPROXIMATE AND MEASURED FROM TOP OF ANCHOR INSTALLATION LEVEL. ANCHOR LENGTHS SHALL BE EXTENDED AS REQUIRED TO ACHIEVE THE ALLOWABLE LOADS SHOWN AND SHALL BE CONFIRMED BY THE MICROPILE CONTRACTOR AND LOAD-TESTING OF TEST-PILE INSTALLATIONS.
3. PRESSURE CEMENT GROUT INSIDE ANCHOR AND IN ANNULAR SPACE BETWEEN ANCHOR AND EARTH.
4. ALL ROCK ANCHORS TO BE SOCKETED A MINIMUM OF 9'-0" INTO COMPETENT BEDROCK. LENGTH IS ADDITIONAL TO LENGTHS PRESCRIBED ABOVE. EXTEND CENTER BAR INTO ROCK SOCKET AS/IF REQUIRED BY MICROPILE CONTRACTOR DESIGN.
5. PROVIDE PROOF-TESTING OF A MINIMUM OF 10% PRODUCTION ROCK ANCHORS. SEE SPECIFICATION.

A S-3-2 TYPICAL ROCK ANCHOR DETAIL

NOT TO SCALE

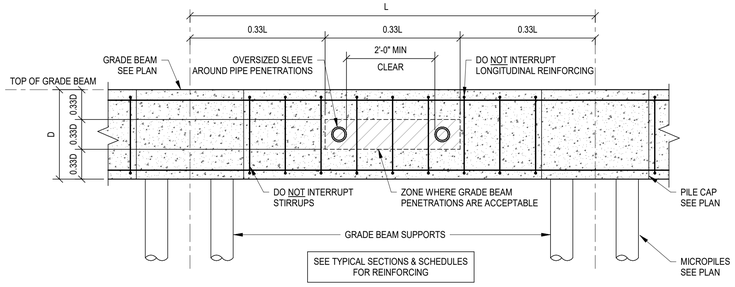

B S-3-2 TYPICAL GRADE BEAM PENETRATION DETAIL

NOT TO SCALE

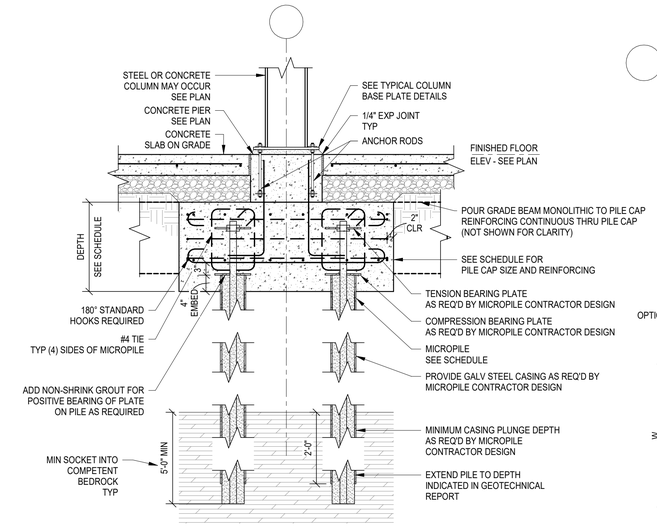

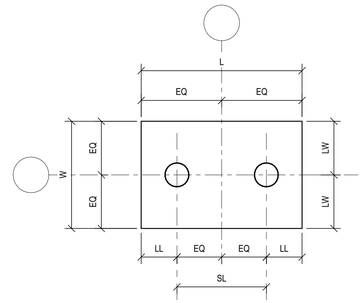

TYPE 'A'

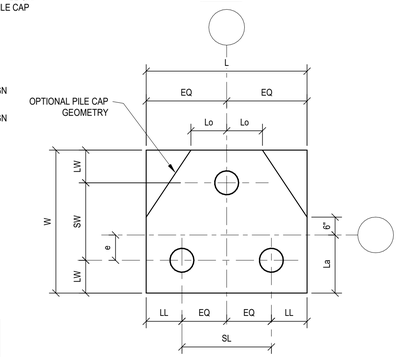

TYPE 'B'

NOTES:
1. LW = 1'-3" FOR MICROPILE CAP LAYOUTS.
   LL = 1'-3" FOR MICROPILE CAP LAYOUTS.
   Lo = 1'-0" FOR MICROPILE CAP LAYOUTS (OPTIONAL).

MICROPILE CAP SCHEDULE

TAG	LAYOUT TYPE	PILE CAP LAYOUT							# PILES (n)	CAP REINFORCING*			
		L	W	SL	SW	La	e	DEPTH		BOTTOM		TOP	
										LONG	SHORT	LONG	SHORT
MPC4038	B	4'-0"	3'-10"	1'-6"	1'-3 1/2"	1'-7"	0'-4"	2'-4"	3	(6) #5 3-WAYS		(6) #5 3-WAYS	
MPC4025	A	4'-0"	2-6	1'-6"	-	-	-	2'-4"	2	(5) #5	(8) #5	(3) #5	(4) #5

*PROVIDE 180° STANDARD HOOKS AT EACH END OF ALL REINFORCING BARS.

MICROPILE SCHEDULE

TOP OF PILE LEVEL	TAG	APPROXIMATE PILE LENGTH	STEEL CASING (SEE NOTE 5)	ALLOWABLE PILE LOADS (KIPS)		
				COMPRESSION (SAFETY FACTOR = 2)	UPLIFT (SAFETY FACTOR = 3)	SHEAR
BOTTOM OF GRADE BEAMS	◯	20'-0"±	-	50k	20k	3.5k

NOTES:
1. MICROPILE LENGTHS AND HOLLOW BAR INSERTS SHALL BE ADJUSTED BY THE CONTRACTOR AS REQUIRED TO MEET THE ALLOWABLE LOADING REQUIREMENTS.
   BASIS OF DESIGN IS:
   A. 6"ø
2. ALL PILE LENGTHS SHOWN IN THE SCHEDULE ARE APPROXIMATE AND MEASURED FROM TOP OF PILE INSTALLATION LEVEL. PILE LENGTHS SHALL BE EXTENDED AS REQUIRED TO ACHIEVE THE ALLOWABLE LOADS SHOWN AND SHALL BE CONFIRMED BY THE MICROPILE CONTRACTOR AND LOAD-TESTING OF TEST-PILE INSTALLATIONS.
3. PRESSURE CEMENT GROUT INSIDE MICROPILE AND IN ANNULAR SPACE BETWEEN PILE AND EARTH.
4. PILE CAP OVERALL DIMENSIONS SHALL BE INCREASED AS NECESSARY TO ACCOMMODATE INCIDENTAL PILE MISLOCATION. MAINTAIN MINIMUM EDGE DISTANCES SHOWN IN DETAILS. DO NOT DECREASE OVERALL PILE CAP DIMENSIONS SHOWN IN TABLE.
5. INSTALL GALV STEEL CASING AS REQ'D TO ACHIEVE ALLOWABLE LOADS SHALL BE CONFIRMED BY MICROPILE CONTRACTOR.
6. ALL MICROPILES TO BE SOCKETED A MINIMUM OF 5'-0" INTO COMPETENT BEDROCK. LENGTH IS ADDITIONAL TO LENGTHS PRESCRIBED ABOVE. EXTEND CENTER BAR INTO ROCK SOCKET AS/IF REQUIRED BY MICROPILE CONTRACTOR DESIGN.
7. PROVIDE A LOAD TEST ON QUANTITY (1) PRE-PRODUCTION FOR PEMB FOUNDATION MICROPILES. SEE SPECIFICATIONS.
8. SEE DETAIL A/S-3-2 FOR ROCK ANCHOR BASIS OF DESIGN AND NOTES

CONCRETE GRADE BEAM SCHEDULE

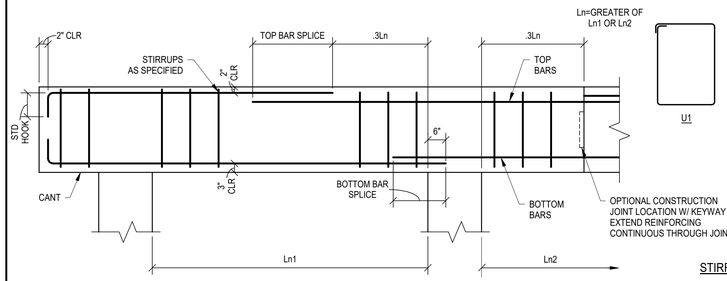

STIRRUP DETAILS

CLASS B SPLICE LENGTH
(4,000 PSI CONCRETE)

BAR SIZE	BOTTOM BARS	TOP BARS
#8	62"	81"

MARK	WIDTH	DEPTH	BOTTOM BARS	TOP BARS	STIRRUPS (EACH END)			REMARKS
					SIZE	TYPE	SPACING	
GB1	30"	24"	(6) #8	(6) #8	#4	U1	1@2", R@10"	-

NOTES:
1. GRADE BEAM SIDE WALLS SHALL BE FORMED. EARTH FORMED IS NOT PERMITTED.
2. LOCATE ALL CONSTRUCTION JOINTS IN GRADE BEAMS CENTERED OVER THE PILE/SUPPORTS OR AS SHOWN IN DETAIL ABOVE. CONSTRUCTION JOINTS SHALL HAVE REINFORCING RUN CONTINUOUS THROUGH THE JOINT (CONTINUING TO SPLICE LOCATIONS SHOWN ABOVE) WITH A MINIMUM 9"x18"x1 1/2" SHEAR KEY.
3. SLEEVE ALL PENETRATIONS THROUGH GRADE BEAMS AND TRENCH FOOTINGS WITH 1" COMPRESSIBLE MATERIAL AROUND PIPE.
4. HORIZONTAL PENETRATIONS THROUGH GRADE BEAMS AND TRENCH FOOTINGS SHALL OCCUR IN THE MIDDLE THIRD OF THE MEMBER DEPTH AND IN THE MIDDLE THIRD OF THE MEMBER SPAN. VERTICAL PENETRATIONS LARGER THAN 2" ARE PROHIBITED IN GRADE BEAMS AND TRENCH FOOTINGS. PENETRATIONS SHALL NOT INTERRUPT OR CUT THROUGH REINFORCING. SEE DET B/S-3-2.
5. WHERE GRADE BEAM MARKS CHANGE OVER INTERMEDIATE SUPPORT, USE TOP BARS OVER SUPPORT FROM GRADE BEAM WITH GREATER REINFORCING.
6. QUANTITY AT STIRRUP SPACING REFERS TO NUMBER OF SPACES, NOT NUMBER OF TIES.
7. CONTRACTOR SHALL PROVIDE AND INSTALL MECHANICAL COUPLERS IN LIEU OF LAP SPLICES FOR LONGITUDINAL REINFORCING WHERE REQUIRED TO PLACE BARS IN CONGESTED ZONES. LOCATIONS OF SPLICE OR MECHANICAL COUPLER SHALL BE AS SHOWN ON THE SCHEDULE. MECHANICAL COUPLER SHALL DEVELOP FULL TENSION AND COMPRESSION CAPACITY OF REBAR TO 1.25 TIMES THE YIELD STRENGTH. SUBMIT PRODUCT CUT SHEET OF MECHANICAL COUPLERS FOR ENGINEER'S REVIEW WITH REINFORCING SHOP DRAWINGS.
8. WHERE "CANT" NOTED ON PLAN, EXTEND TOP REINFORCEMENT FROM END OF CANTILEVER TO DISTANCE OF 0.3Ln PAST FIRST SUPPORT.

C S-3-2 TYPICAL CONCRETE GRADE BEAM SCHEDULE

NOT TO SCALE

D S-3-2 MICROPILE AND MICROPILE CAP SCHEDULE

NOT TO SCALE

FAILURE TO ABIDE BY DESIGN PROFESSIONAL'S ADVICE OR GUIDANCE

THE DESIGN PROFESSIONAL WAIVES ANY AND ALL RESPONSIBILITY AND LIABILITY FOR ANY AND ALL DAMAGES RESULTING FROM FAILURE TO FOLLOW THESE PLANS, SPECIFICATIONS AND THE DESIGN WHICH ARISE FROM OTHERS' FAILURE TO OBTAIN AND FOLLOW THE DESIGN PROFESSIONAL'S GUIDANCE WITH RESPECT TO ANY AND ALL CONSTRUCTION PROCESSES INCONSISTENCIES, AMBIGUITIES OR CONFLICTS WHICH ARE ALLEGED

BROWN+KUBICAN
STRUCTURAL ENGINEERS
8900 Greeneway Commons Pl #201 Louisville, KY 40220
502-749-2061 www.brownkubican.com

IT IS A VIOLATION OF LAW FOR ANY PERSON TO ALTER THIS DRAWING WITHOUT WRITTEN PERMISSION FROM KENTUCKY ENGINEERING GROUP, PLLC AND ACTING UNDER THE DIRECTION OF A LICENSED ENGINEER.

THIS DRAWING WAS PREPARED AT THE SCALE INDICATED. INACCURACIES IN THE STATED SCALE MAY BE INTRODUCED WHEN DRAWINGS ARE REPRODUCED BY ANY MEANS. USE THE GRAPHIC SCALE BAR IN THE DRAWING OR TITLE BLOCK TO DETERMINE THE ACTUAL SCALE.

NO.	DATE	REVISIONS	BY

DATE:	2/16/26
PROJECT MGR:	JAB
DRAWN BY	SWC
CHECKED BY	JAB
SCALE:	AS NOTED

2022 © Kentucky Engineering Group, PLLC

P.O. Box 1034
VERSAILLES, KENTUCKY 40383
KENTUCKY ENGINEERING GROUP, PLLC

WATER TREATMENT PLANT
GAC FACILITY
FOR THE
CITY OF CYNTHIANA

TYPICAL FOUNDATION DETAILS



PROJECT NO.
25009

SHEET NO.
S-3-2

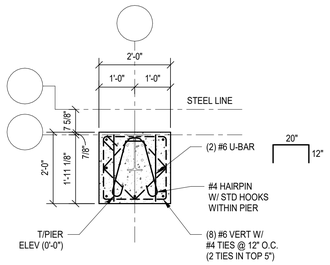

P1

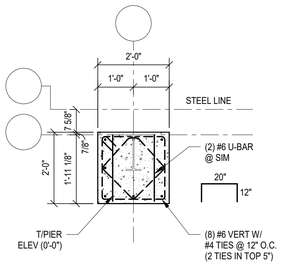

P2

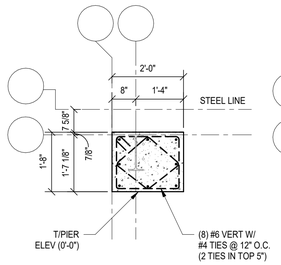

P3

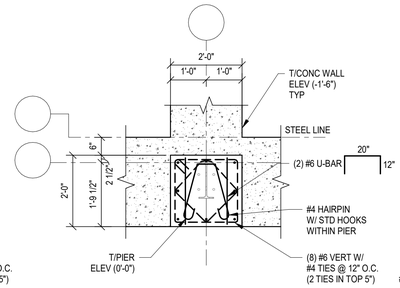

P4

NOTE: PIER TO BE POURED MONOLITHICALLY WITH ELEVATED SLAB

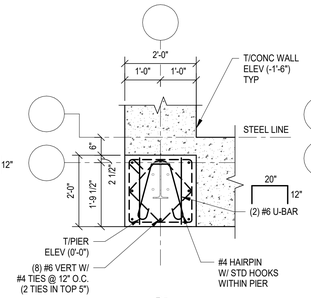

P5

NOTE: PIER TO BE POURED MONOLITHICALLY WITH ELEVATED SLAB

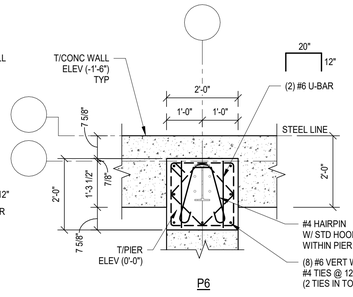

P6

NOTE: PIER TO BE POURED MONOLITHICALLY WITH ELEVATED SLAB

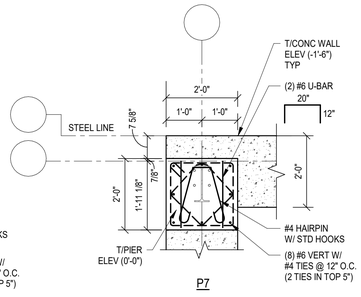

P7

NOTE: PIER TO BE POURED MONOLITHICALLY WITH ELEVATED SLAB

NOTES:
1. SEE PLAN FOR PIER ORIENTATION.
2. WALL REINFORCEMENT NOT SHOWN FOR CLARITY. SEE SECTIONS.
3. WHERE STEM WALL STEPS DOWN AT PIER, FILL PIER WITH CONCRETE TO TOP OF STEM WALL ELEVATION AFTER COLUMN HAS BEEN INSTALLED.

A S-3-3 TYPICAL CONCRETE PIER DETAILS

NOT TO SCALE

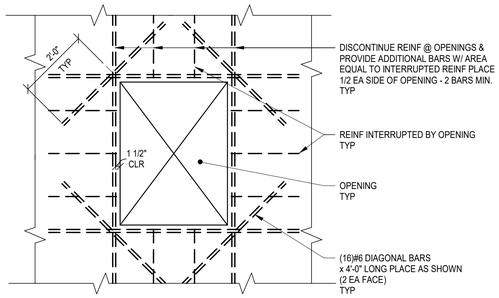

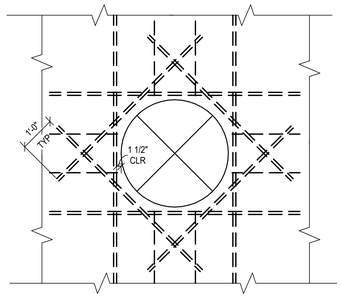

B S-3-3 TYPICAL REINFORCING AT CONCRETE WALL OPENING DETAIL FOR ENVIRONMENTAL CONCRETE STRUCTURES

NOT TO SCALE

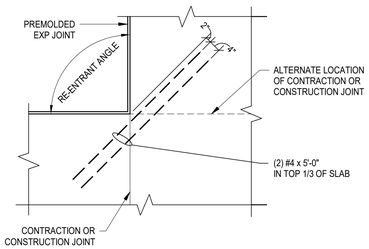

C S-3-3 TYPICAL SLAB ON GRADE JOINT AT RE-ENTRANT CORNER

NOT TO SCALE

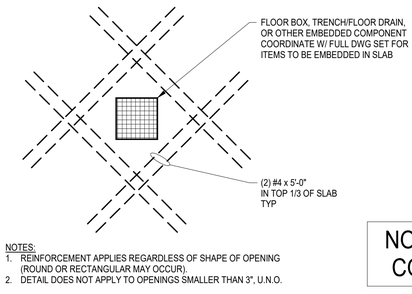

NOTES:
1. REINFORCEMENT APPLIES REGARDLESS OF SHAPE OF OPENING (ROUND OR RECTANGULAR MAY OCCUR).
2. DETAIL DOES NOT APPLY TO OPENINGS SMALLER THAN 3", U.N.O.

NOT FOR ENVIRONMENTAL CONCRETE STRUCTURES

D S-3-3 TYPICAL SLAB REINFORCEMENT AT FLOOR BOXES, TRENCH/FLOOR DRAINS, ETC DETAIL

NOT TO SCALE

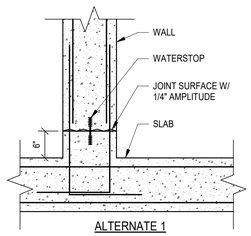

ALTERNATE 1

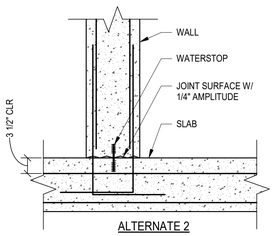

ALTERNATE 2

MAT SLAB TO WALL

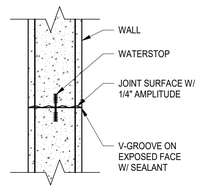

WALL TO WALL

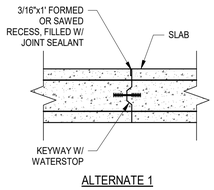

ALTERNATE 1

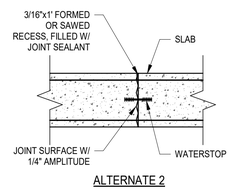

ALTERNATE 2

SLAB TO SLAB

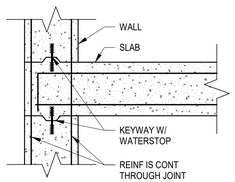

SLAB TO WALL

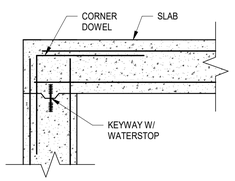

TOP OF WALL

E S-3-3 TYPICAL WATERSTOP CONSTRUCTION JOINT DETAILS FOR ENVIRONMENTAL CONCRETE STRUCTURES

NOT TO SCALE

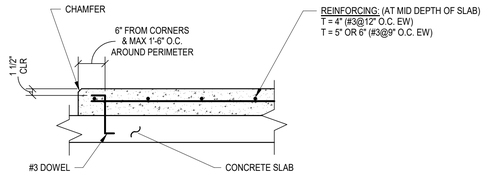

FOR NEW CONSTRUCTION

NOTES:
1. BASE SLAB PREPARATION NEW CONSTRUCTION: CLEAN SLAB & WET DOWN PRIOR TO POURING PAD.
2. EXISTING CONSTRUCTION: SWEEP CONCRETE CLEAN, ROUGHEN SLAB, & APPLY BONDING AGENT ACCORDING TO SUPPLIER'S DIRECTIONS.
3. CONCRETE MIX: USE SAME CONCRETE AS USED ELSEWHERE ON JOB, BUT NOT LESS THAN 3000 PSI (MAX 4" SLUMP).
4. CURING: CURE FOR 7 DAYS BY EITHER OF THE FOLLOWING METHODS:
   A. COVER W/ BURLAP & KEEP CONTINUOUSLY WET.
   B. COVER W/ 6 MIL VISQUEEN. TAPE ALL JOINTS & TAPE VISQUEEN TO BASE SLAB.

F S-3-3 MECHANICAL HOUSEKEEPING PAD DETAIL

NOT TO SCALE

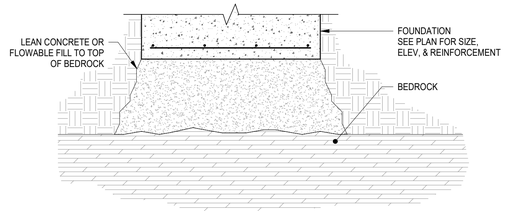

NOTES:
1. WHERE BOTTOM OF FOUNDATION BEARS DIRECTLY ON OR INTO COMPETENT ROCK, CONTRACTOR SHALL OMIT FILL BELOW FOUNDATION.
2. AT CONTRACTOR'S OPTION, CONCRETE FOUNDATION THICKNESS CAN BE INCREASED TO EXTEND TO ROCK SURFACE IN LIEU OF PLACING LEAN CONCRETE OR FLOWABLE FILL. REBAR SHALL BE CHAIRED OR TIED TO OCCUR IN THE INTENDED DESIGN LOCATION.
3. LEAN CONCRETE WIDTH SHALL EQUAL OR EXCEED THE FOUNDATION FOOTPRINT.

G S-3-3 TYPICAL ROCK-BEARING FOOTING DETAIL

NOT TO SCALE

FAILURE TO ABIDE BY DESIGN ASSUMPTIONS OR TO OBTAIN GUIDANCE

THE DESIGN PROFESSIONAL IN RESPONSIBLE CHARGE AND ALL RESPONSIBILITY AND LIABILITY FOR THE PROJECT CEASES UPON FAILURE TO FOLLOW THESE PLANS, SPECIFICATIONS AND/OR DESIGN INTENT OR TO OBTAIN ANY REQUIRED CLARIFICATION. ANY ARISE FROM OTHERS' FAILURE TO OBTAIN PROFESSIONAL'S GUIDANCE WITH RESPECT TO ANY PROBLEMS, DEFICIENCIES, INCONSISTENCIES, AMBIGUITIES OR OMISSIONS THAT ARE ALLEGED.

BROWN+KUBICAN
STRUCTURAL ENGINEERS
8900 Greeneway Commons Pl #201 Louisville, KY 40220
502-749-2061 www.brownkubican.com

IT IS A VIOLATION OF LAW FOR ANY PERSON TO ALTER THIS DRAWING WITHOUT WRITTEN PERMISSION FROM KENTUCKY ENGINEERING GROUP, PLLC AND ACTING UNDER THE DIRECTION OF A LICENSED ENGINEER.

THIS DRAWING WAS PREPARED AT THE SCALE INDICATED. INACCURACIES IN THE STATED SCALE MAY BE INTRODUCED WHEN DRAWINGS ARE REPRODUCED BY ANY MEANS. USE THE GRAPHIC SCALE BAR IN THE DRAWING OR TITLE BLOCK TO DETERMINE THE ACTUAL SCALE.

NO.	DATE	REVISIONS	BY

DATE:	2/16/26
PROJECT MGR:	JAB
DRAWN BY	SWC
CHECKED BY	JAB
SCALE:	AS NOTED

2022 © Kentucky Engineering Group, PLLC

P.O. Box 1034
VERSAILLES, KENTUCKY 40383
KENTUCKY ENGINEERING GROUP, PLLC

WATER TREATMENT PLANT
GAC FACILITY
FOR THE
CITY OF CYNTHIANA

TYPICAL FOUNDATION DETAILS

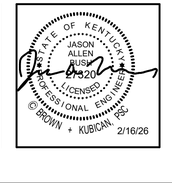

PROJECT NO.
25009

SHEET NO.
S-3-3

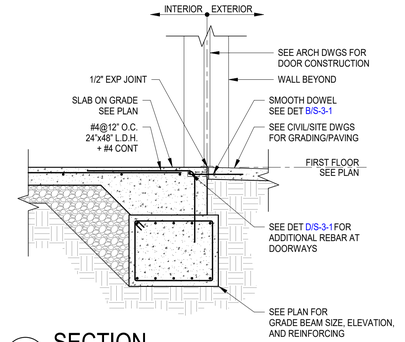

A S-3-4 SECTION
1/2" = 1'-0"

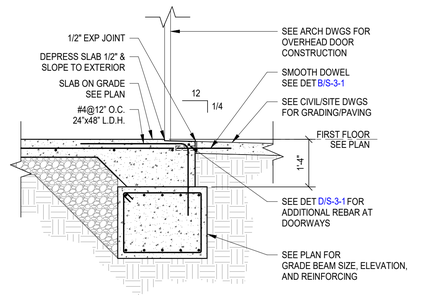

B S-3-4 SECTION
1/2" = 1'-0"

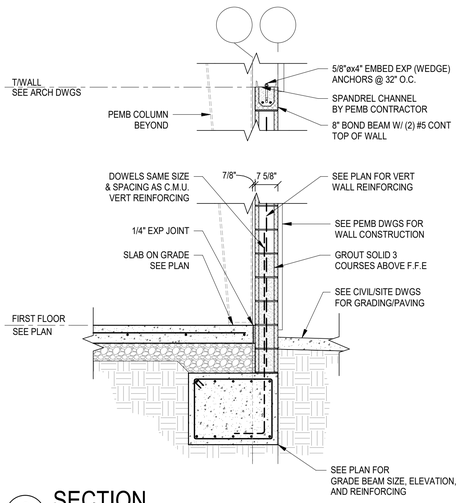

C S-3-4 SECTION
1/2" = 1'-0"

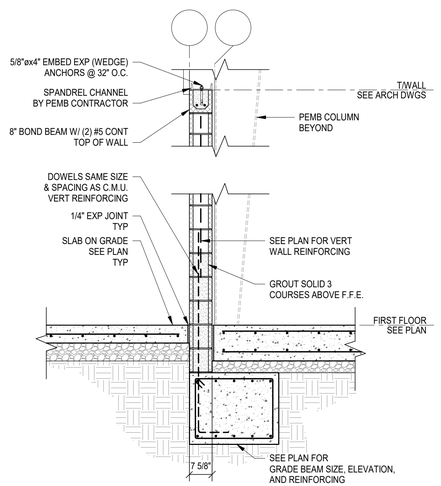

D S-3-4 SECTION
1/2" = 1'-0"

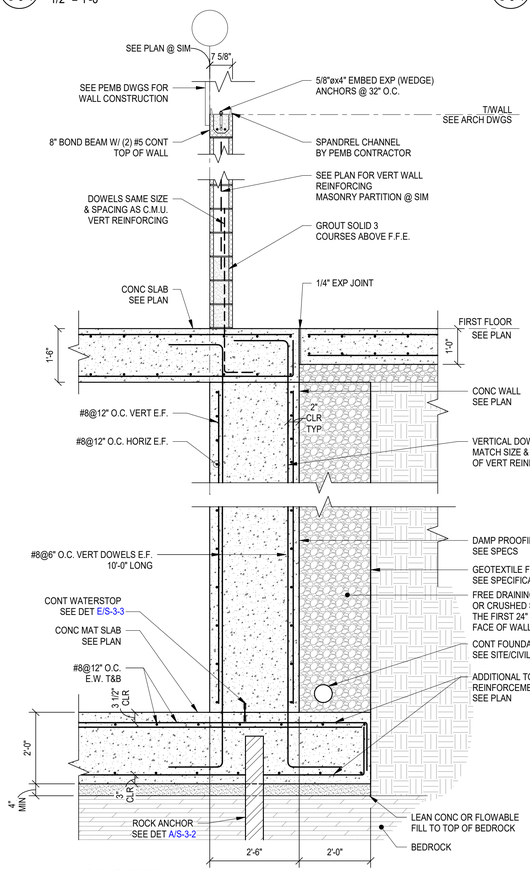

E S-3-4 SECTION
1/2" = 1'-0"

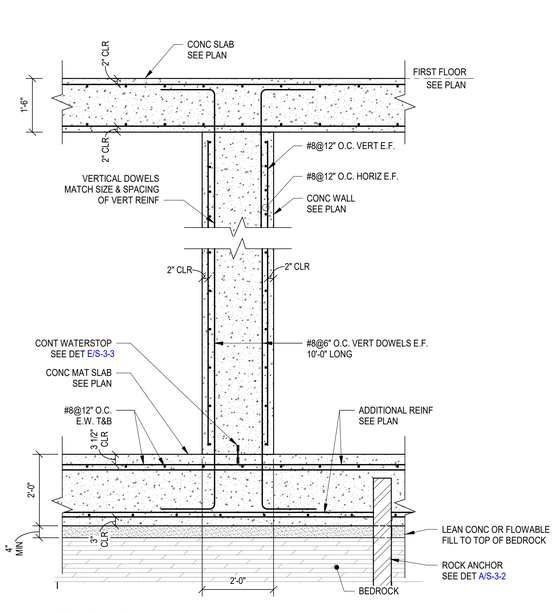

F S-3-4 SECTION
1/2" = 1'-0"

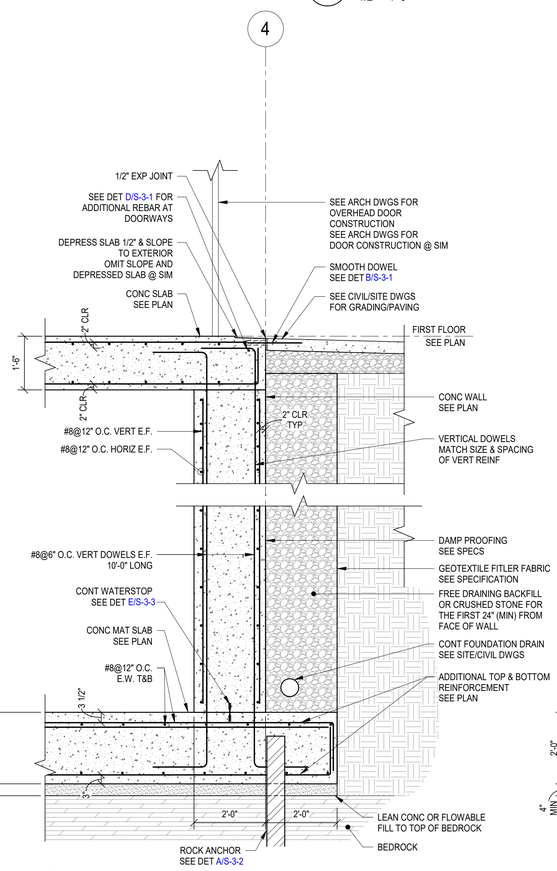

G S-3-4 SECTION
1/2" = 1'-0"

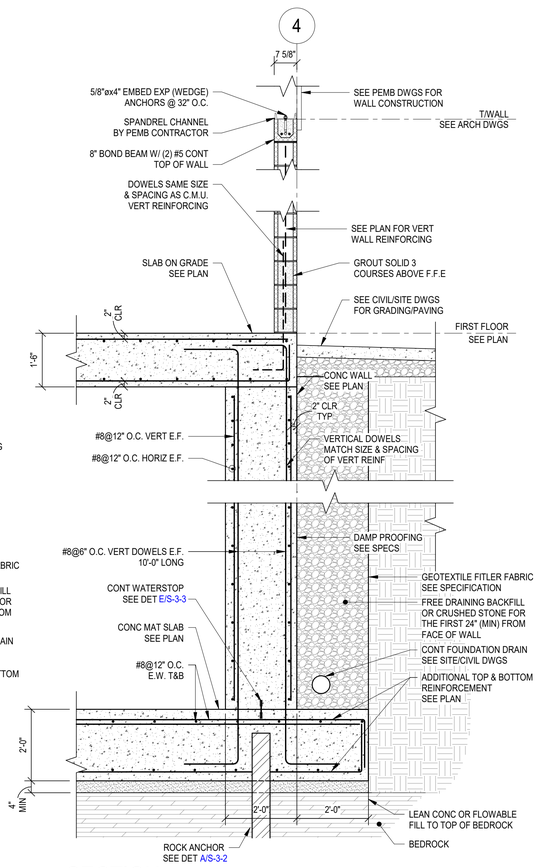

H S-3-4 SECTION
1/2" = 1'-0"

FAILURE TO ABIDE BY DESIGN PROFESSIONAL'S CONSTRUCTION SEQUENCE TO OBTAIN GUIDANCE

THE DESIGN PROFESSIONAL WAIVES ANY AND ALL RESPONSIBILITY AND LIABILITY FOR ANY AND ALL CONSTRUCTION PROBLEMS DUE TO FAILURE TO FOLLOW THESE PLANS, SPECIFICATIONS AND/OR REPORTS. IT IS THE CONTRACTOR'S RESPONSIBILITY TO OBTAIN ANY AND ALL CLARIFICATIONS WITH RESPECT TO THE DESIGN PROFESSIONAL'S GUIDANCE WITH RESPECT TO THE CONSTRUCTION SEQUENCE. ANY INCONSISTENCIES, AMBIGUITIES OR CONFLICTS WHICH ARE ALLEGED

BROWN+KUBICAN
STRUCTURAL ENGINEERS
8900 Greeneway Commons Pl #201
Louisville, KY 40220
502-749-2061
www.brownkubican.com

IT IS A VIOLATION OF LAW FOR ANY PERSON TO ALTER THIS DRAWING WITHOUT WRITTEN PERMISSION FROM KENTUCKY ENGINEERING GROUP, PLLC AND ACTING UNDER THE DIRECTION OF A LICENSED ENGINEER.

THIS DRAWING WAS PREPARED AT THE SCALE INDICATED. INACCURACIES IN THE STATED SCALE MAY BE INTRODUCED WHEN DRAWINGS ARE REPRODUCED BY ANY MEANS. USE THE GRAPHIC SCALE BAR IN THE DRAWING OR TITLE BLOCK TO DETERMINE THE ACTUAL SCALE.

NO.	DATE	REVISIONS	BY

DATE:	2/16/26
PROJECT MGR:	JAB
DRAWN BY	SWC
CHECKED BY	JAB
SCALE:	AS NOTED

2022 © Kentucky Engineering Group, PLLC

P.O. Box 1034
VERSAILLES, KENTUCKY 40383
KENTUCKY ENGINEERING GROUP, PLLC

WATER TREATMENT PLANT
GAC FACILITY
FOR THE
CITY OF CYNTHIANA

FOUNDATION SECTIONS

PROJECT NO.
25009

SHEET NO.
S-3-4

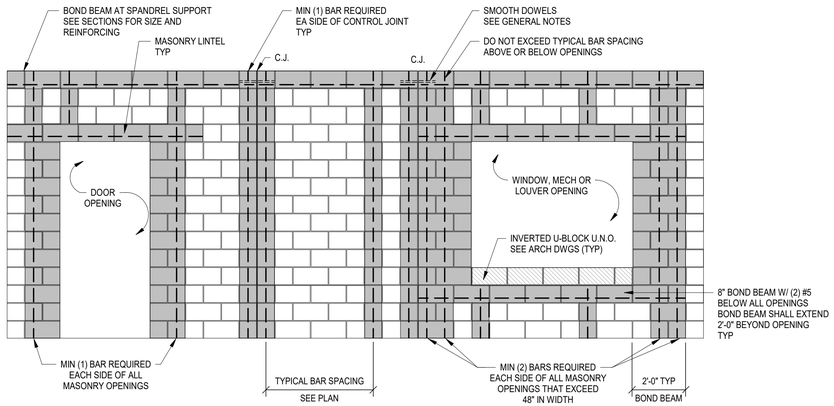

NOTES:
1. SEE MASONRY GENERAL NOTES FOR REINFORCING NOT SHOWN AND GROUTING PROCEDURES.
2. CONTROL JOINTS SHALL EXTEND FULL HEIGHT OF WALL AND SHALL ALIGN FROM TOP TO BOTTOM. CONTROL JOINTS SHALL NOT EXTEND BELOW GRADE.
3. CONTROL JOINTS SHALL BE LOCATED OUTSIDE MASONRY OPENING JAMB REINFORCING.
4. M.E.P. OR OTHER PENETRATIONS IN WALL SHALL NOT OCCUR THROUGH A SOLID GROUTED CELL UNLESS NOTED OTHERWISE BY THE STRUCTURAL ENGINEER-OF-RECORD. M.E.P. OR OTHER PENETRATIONS IN WALL SHALL NOT OCCUR WITHIN BOND BEAMS NOR WITHIN OPENING JAMB AREAS.

A S-4-1 TYPICAL MASONRY WALL REINFORCING DETAIL

NOT TO SCALE

LINTEL SCHEDULE

MARK	DEPTH	HORIZ REINFORCING	JAMB REINFORCING EACH SIDE OF OPENING
ML8	8"	(2) #5 BOT CONT	1 CELL W/ #5 VERT
ML16	16"	(2) #5 BOT CONT	2 CELLS W/ #5 VERT PER CELL

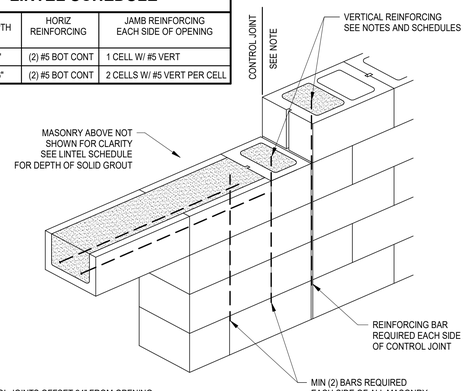

NOTES:
1. PROVIDE CONTROL JOINTS OFFSET 24" FROM OPENING ON BOTH SIDES OF OPENINGS WIDER THAN 6'-8" AND ON ONE SIDE OF OPENINGS 6'-8" WIDE AND LESS.
2. REINFORCING SHALL HAVE 1/2" MINIMUM GROUT COVER TO SURFACE OF BOND BEAM.
3. REINFORCING SHALL BE LOCATED 3" MAXIMUM FROM BOTTOM OF LINTEL BLOCK.
4. WHERE JAMB IS LESS THAN 2'-0" WIDE, HOOK HORIZONTAL LINTEL BARS AT ENDS.

B S-4-1 TYPICAL MASONRY LINTEL BEARING DETAIL

NOT TO SCALE

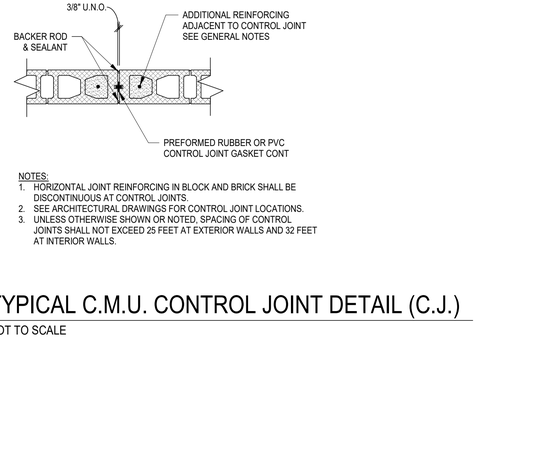

NOTES:
1. HORIZONTAL JOINT REINFORCING IN BLOCK AND BRICK SHALL BE DISCONTINUOUS AT CONTROL JOINTS.
2. SEE ARCHITECTURAL DRAWINGS FOR CONTROL JOINT LOCATIONS.
3. UNLESS OTHERWISE SHOWN OR NOTED, SPACING OF CONTROL JOINTS SHALL NOT EXCEED 25 FEET AT EXTERIOR WALLS AND 32 FEET AT INTERIOR WALLS.

C S-4-1 TYPICAL C.M.U. CONTROL JOINT DETAIL (C.J.)

NOT TO SCALE

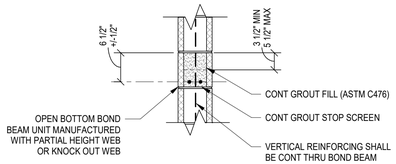

NOTES:
1. MORTAR WEBS OF BLOCK AT VERTICAL REINFORCING TO PREVENT GROUT FROM FLOWING INTO THE ADJACENT CELL.
2. UNLESS OTHERWISE SHOWN OR NOTED, REINFORCING SHALL BE PLACED IN THE BOTTOM OF THE BOND BEAM AS SHOWN IN THIS DETAIL. WHERE REINFORCING IS SHOWN OR NOTED TO BE IN THE TOP OF THE BOND BEAM, BAR LOCATION SHALL BE 6 1/2"± 1/2" FROM THE BOTTOM OF THE BOND BEAM AND THE BOND BEAM UNIT SHALL BE INVERTED SUCH THAT THE REMAINING WEB IS IN THE BOTTOM.
3. REINFORCING SHALL HAVE 1/2" MINIMUM GROUT COVER TO ALL C.M.U. SURFACES.
4. GROUT STOP SCREEN SHALL BE DUR-O-STOP AS MANUFACTURED BY DUR-O-WAL OR OTHER APPROVED EQUIVALENT.
5. USE LINTEL BLOCK WHERE BOND BEAM OCCURS DIRECTLY ABOVE WINDOW, DOOR, OR LOUVER OPENING.

D S-4-1 TYPICAL C.M.U. BOND BEAM DETAIL

NOT TO SCALE

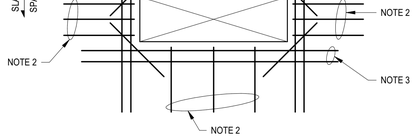

NOTES:
1. MAIN REINFORCING INTERRUPTED BY OPENING TO BE LOCATED EQUALLY ON EACH SIDE OF OPENING.
2. ADD MAIN STEEL OR TEMPERATURE REINFORCING AS SCHEDULED OPPOSITE THE OPENING.
3. ADD (2) #5 TOP & BOTTOM ON EACH SIDE OF OPENING UNLESS OTHERWISE NOTED ON PLAN.
4. ADD DIAGONAL BARS (#4 TOP & BOTTOM x 3'-0").
5. IF OPENING DIMENSION IS < 16" - SPREAD SCHEDULED REINFORCING & ADD CORNER BARS.

E S-4-1 REINFORCING AT ELEVATED SLAB OPENINGS

NOT TO SCALE

FAILURE TO ABIDE BY DESIGN CONCEPTS CONTAINED HEREIN OR TO OBTAIN GUIDANCE FROM THE DESIGNER OF RECORD IN THE EVENT OF ANY ADAPTATION OR MODIFICATION WILL BE AT THE USER'S SOLE RISK AND WITHOUT LIABILITY OR LEGAL EXPOSURE TO THE DESIGNER OF RECORD. FAILURE TO FOLLOW THESE PLANS, SPECIFICATIONS AND DETAILS AS INTENDED BY THE DESIGNER OF RECORD WITHOUT CONSULTATION AND PROFESSIONAL GUIDANCE FROM THE DESIGNER OF RECORD MAY RESULT IN UNSAFE CONDITIONS WHICH ARISE FROM OTHERS' FAILURE TO OBTAIN ASSISTANCE FROM THE DESIGNER OF RECORD. PROFESSIONAL'S GUIDANCE, WITH RESPECT TO ADAPTATIONS, MODIFICATIONS, INCONSISTENCIES, AMBIGUITIES OR CONFLICTS WHICH ARE ALLEGED

BROWN+KUBICAN
STRUCTURAL ENGINEERS
8900 Greeneway Commons Pl #201 Louisville, KY 40220
502-749-2061 www.brownkubican.com

IT IS A VIOLATION OF LAW FOR ANY PERSON TO ALTER THIS DRAWING WITHOUT WRITTEN PERMISSION FROM KENTUCKY ENGINEERING GROUP, PLLC AND ACTING UNDER THE DIRECTION OF A LICENSED ENGINEER.

THIS DRAWING WAS PREPARED AT THE SCALE INDICATED. INACCURACIES IN THE STATED SCALE MAY BE INTRODUCED WHEN DRAWINGS ARE REPRODUCED BY ANY MEANS. USE THE GRAPHIC SCALE BAR IN THE DRAWING OR TITLE BLOCK TO DETERMINE THE ACTUAL SCALE.

NO.	DATE	REVISIONS	BY

DATE:	2/16/26
PROJECT MGR:	JAB
DRAWN BY	SWC
CHECKED BY	JAB
SCALE:	AS NOTED

2022 © Kentucky Engineering Group, PLLC

P.O. Box 1034
VERSAILLES, KENTUCKY 40383
KENTUCKY ENGINEERING GROUP, PLLC

WATER TREATMENT PLANT
GAC FACILITY
FOR THE
CITY OF CYNTHIANA

TYPICAL FRAMING DETAILS



PROJECT NO. 25009

SHEET NO. S-4-1

MECHANICAL ABBREVIATIONS

AFF	ABOVE FINISHED FLOOR
AHU	AIR HANDLER UNIT
AV	AIR VALVE
BTU	BRITISH THERMAL UNITS
BTUH	BRITISH THERMAL UNITS PER HOUR
CFM	CUBIC FEET PER MINUTE
CH	CEILING HEATER
CU	CONDENSING UNIT
DB	DRY BULB
DN	DOWN
EA	EXHAUST AIR
EAT	ENTERING AIR TEMPERATURE
EF	EXHAUST FAN
ESP	EXTERNAL STATIC PRESSURE
EWC	ELECTRIC WATER COOLER
EWH	ELECTRIC WALL HEATER
EWT	ENTERING WATER TEMPERATURE
EX OR EXIST	EXISTING
EXP	EXPANSION
EXT	EXTERNAL
FCU	FAN COIL UNIT
FF	FINISHED FLOOR
FP	FIRE PROTECTION
FPWH	FREEZE PROOF WALL HYDRANT
FRP	FIBERGLASS REINFORCED POLYESTER
FT	FEET, FOOT
GPM	GALLONS PER MINUTE
GRV	GRAVITY ROOF VENTILATOR
HP	HORSE POWER
HP	HEAT PUMP
HPWR	HEAT PUMP WATER RETURN
HPWS	HEAT PUMP WATER SUPPLY
HPWS & R	HEAT PUMP WATER SUPPLY & RETURN
HVAC	HEATING, VENTILATION, & AIR CONDITIONING
IN	INCH
KW	KILOWATT
LAT	LEAVING AIR TEMPERATURE
LAV	LAVATORY
LB	POUND
MAU	MAKE UP AIR UNIT
MBH	THOUSAND BRITISH THERMAL UNITS PER HOUR
NC	NOISE CRITERIA
NFPA	NATIONAL FIRE PROTECTION AGENCY
NTS	NOT TO SCALE
OA	OUTSIDE AIR
PD	PRESSURE DROP
PE	POLYETHYLENE
PRV	PRESSURE REDUCING VALVE
PTAC	PACKAGED TERMINAL AIR CONDITIONER
RA	RETURN AIR
RBP	REDUCED BACKFLOW PREVENTER
SA	SUPPLY AIR
SF	SUPPLY FAN
SP	STATIC PRESSURE
TOA	TEMPERED OUTSIDE AIR
TYP	TYPICAL
UH	UNIT HEATER
UV	UNIT VENTILATOR
VAV	VARIABLE AIR VOLUME
WB	WET BULB
WC	WATER COLUMN
WF	WATER FOUNTAIN
WG	WATER GAUGE
WHTR	WATER HEATER
WSHP	WATER SOURCE HEAT PUMP

HVAC SYMBOLS

A	COMPRESSED AIR
BA	BREATHING AIR
CHR	CHILLED AND HOT WATER RETURN (2-PIPE SYS.)
CHS	CHILLED AND HOT WATER SUPPLY (2-PIPE SYS.)
CHWR	CHILLED WATER RETURN
CHWS	CHILLED WATER SUPPLY
XCR	CONDENSATE RETURN X - "G" GRAVITY,"P" PUMPED
CR	CONDENSER WATER RETURN
CS	CONDENSER WATER SUPPLY
D	CONDENSATE DRAIN PIPING
F	FIRE PROTECTION
HPSTM	HIGH PRESSURE STEAM
HPWR	HEAT PUMP WATER RETURN
HPWS	HEAT PUMP WATER SUPPLY
HWR	HOT WATER RETURN PIPING
HWS	HOT WATER SUPPLY PIPING
LPSTM	LOW PRESSURE STEAM
MPCR	MEDIUM PRESSURE CONDENSATE RETURN
MPSTM	MEDIUM PRESSURE STEAM
PCD	PUMPED CONDENSATE DISCHARGE
RL	REFRIGERANT LIQUID PIPING
RS	REFRIGERANT SUCTION PIPING
VAC	VACUUM
T, TN, TV	THERMOSTAT; NORMAL, N=NIGHT SETBACK, V=VENTILATION ONLY
AC-X	AIR CONDITIONING UNIT TAG
AH-X	AIR HANDLER UNIT TAG
E-1 / XXX	EXHAUST GRILLE TAG XXX DENOTES CFM
ERU-X	ENERGY RECOVERY UNIT TAG
EF-X	EXHAUST FAN UNIT TAG
L-1	LOUVER TAG
	CONNECT NEW TO EXISTING
X	KEYNOTE REFERENCE
	PROPELLER FAN
	DIRECTION OF AIRFLOW
M	DUCT SIZE LOW LEAKAGE DAMPER WITH PNEUM./ELEC. OPERATOR
	UNIT HEATER (HORIZONTAL)

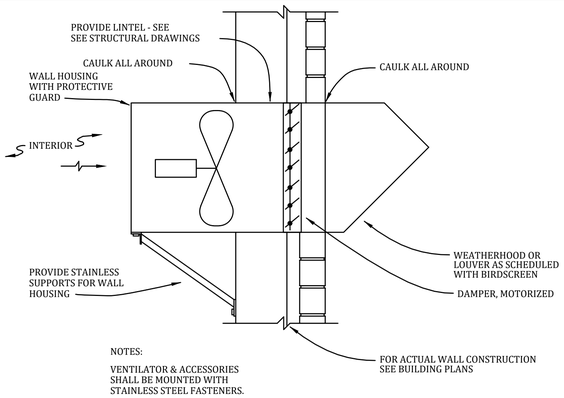

NOTES:

VENTILATOR & ACCESSORIES SHALL BE MOUNTED WITH STAINLESS STEEL FASTENERS.

WALL-MOUNTED PROPELLER FAN DETAIL

NOT TO SCALE

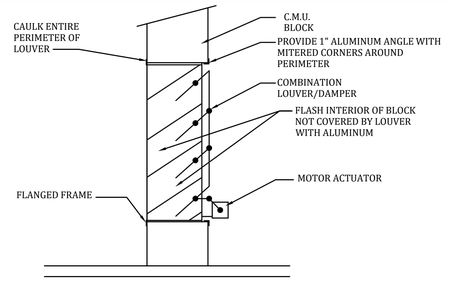

LOUVER INSTALLATION DETAIL - CMU

NOT TO SCALE

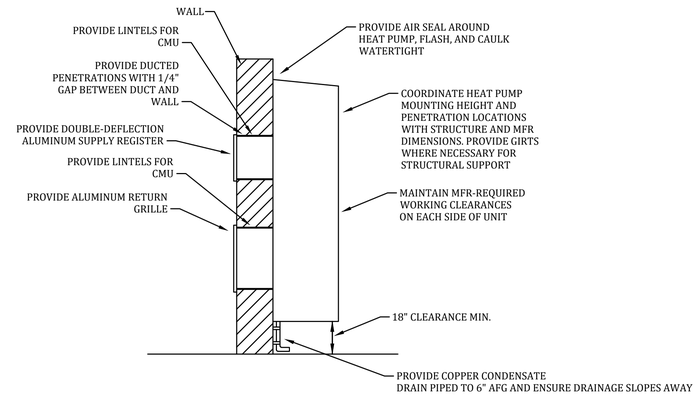

WALL-MOUNT HEAT PUMP INSTALLATION DETAIL

N.T.S.

FAN SCHEDULE

TAG	BASIS OF DESIGN MFR	MODEL NO.	CFM	EXT. S.P. (IN W.C.)	RPM	HP	VOLTAGE / PHASE	REMARKS
EF-1	GREENHECK	SE1-18	4000	0.2	A/R	0.75	460/3ϕ	1, 2, 3, 4
EF-2	GREENHECK	SE1-18	2000	0.2	A/R	0.75	460/3ϕ	1, 2, 3, 5
EF-3	GREENHECK	SE1-18	3000	0.2	A/R	0.75	460/3ϕ	1, 2, 3, 8
EF-4	GREENHECK	SE1-18	3000	0.2	A/R	0.75	460/3ϕ	1, 2, 3, 8
HVLS-1	BIG ASS FANS	PFX4-12	N/A	N/A	130	3	208/3ϕ	6, 7
HVLS-2	BIG ASS FANS	PFX4-12	N/A	N/A	130	3	208/3ϕ	6, 7

REMARKS:
1. FURNISH WITH BIRD SCREEN, WEATHERHOOD 45°, AND WALL HOUSING
2. FURNISH WITH MOTORIZED BACKDRAFT DAMPER, 120 VAC WITH LIMIT SWITCH
3. FURNISH WITH INVENTOR-DUTY MOTOR WITH MINIMUM 80% TURNDOWN CAPABILITY
4. BALANCE FAN TO 330 CFM IN LOW SPEED MODE AND 4000 CFM IN HIGH SPEED MODE
5. BALANCE FAN TO 200 CFM IN LOW SPEED MODE AND 2000 CFM IN HIGH SPEED MODE
6. FURNISH WITH 5' EXTENSION TUBE
7. FURNISH WITH MULTI-FAN CONTROLLER
8. BALANCE FAN TO 200 CFM IN LOW SPEED MODE AND 3000 CFM IN HIGH SPEED MODE

ELECTRIC HEATER SCHEDULE

UNIT NO.	CAPACITY KW	CFM	VOLT / PHASE	MFR / MODEL NO.	REMARKS
EUH-1	7.5	700	480/3ϕ	MARKEL 5100	1, 2, 3
EUH-2	7.5	700	480/3ϕ	MARKEL 5100	1, 2, 3
EUH-3	7.5	700	480/3ϕ	MARKEL 5100	1, 2, 3
EUH-4	7.5	700	480/3ϕ	MARKEL 5100	1, 2, 3
EUH-5	7.5	700	480/3ϕ	MARKEL 5100	1, 2, 3
EUH-6	7.5	700	480/3ϕ	MARKEL 5100	1, 2, 3
EUH-7	10	700	480/3ϕ	MARKEL 5100	1, 2, 3
EUH-8	10	700	480/3ϕ	MARKEL 5100	1, 2, 3
EUH-9	7.5	700	480/3ϕ	MARKEL 5100	1, 2, 3
EUH-10	7.5	700	480/3ϕ	MARKEL 5100	1, 2, 3
EUH-11	7.5	700	480/3ϕ	MARKEL 5100	1, 2, 3

REMARKS:
1. BUILT IN ELECTRICAL DISCONNECT SWITCH.
2. PROVIDE REMOTE-MTD THERMOSTAT.
3. FURNISH WITH SWIVEL WALL BRACKET.

WALL MOUNT PACKAGED HEAT PUMP SCHEDULE

TAG	MODEL	COOLING		TOTAL COOLING MBH	SENSIBLE COOLING MBH	EER ARI-390	HEATING @ 5°F MBH	COP @ 5°F	VOLTAGE / PHASE	OA CFM	FAN			ELEC. HEAT KW
		EAT DB/WB	OAT DB								CFM	ESP	RPM	
HPU-1	BARD W24HF	80/67	95	23	17.4	11.0	9.8	1.7	480/3ϕ	75	800	0.1	A/R	5.0
HPU-2	BARD W24HF	80/67	95	23	17.4	11.0	9.8	1.7	480/3ϕ	75	800	0.1	A/R	5.0

NOTES:
1. REFER TO HEAT PUMP SPECIFICATION FOR ADDITIONAL REQUIREMENTS
2. BASIS OF DESIGN IS BARD
3. PROVIDE MOTORIZED FRESH AIR DAMPER
4. PROVIDE DIGITAL PROGRAMMABLE LEAD/LAG CONTROLLER WITH BUILT-IN TEMPERATURE SENSOR
5. PROVIDE CUSTOM-COLOR - OWNER TO SELECT COLOR DURING SUBMITTAL REVIEW

LOUVER SCHEDULE

TAG	BASIS OF DESIGN MFR	MODEL	NECK SIZE	MAX. CFM	AIR PATTERN	MAX P.D. IN W.C.	N.C.	REMARKS
LD-1	GREENHECK	ECD-601	40" x 40"	4000	45% FREE AREA	0.1	-	1, 2, 3, 4
LD-2	GREENHECK	ECD-601	24" x 40"	2000	45% FREE AREA	0.1	-	1, 2, 3, 4
LD-3	GREENHECK	ECD-601	32" x 40"	3000	45% FREE AREA	0.1	-	1, 2, 3, 4
LD-4	GREENHECK	ECD-601	32" x 40"	3000	45% FREE AREA	0.1	-	1, 2, 3, 4

REMARKS:
1. HORIZONTAL FRONT BLADES.
2. FURNISHED WITH MOTORIZED DAMPER, 120VAC, WITH LIMIT SWITCH
3. FURNISH CUSTOM COLOR TO BE SELECTED BY OWNER DURING SUBMITTAL REVIEW. FINISH SHALL BE AAMA 2605, 70% KYNAR
4. PROVIDE BIRD SCREEN

IT IS A VIOLATION OF LAW FOR ANY PERSON TO ALTER THIS DRAWING WITHOUT WRITTEN PERMISSION FROM KENTUCKY ENGINEERING GROUP, PLLC AND ACTING UNDER THE DIRECTION OF A LICENSED ENGINEER.

THIS DRAWING WAS PREPARED AT THE SCALE INDICATED. INACCURACIES IN THE STATED SCALE MAY BE INTRODUCED WHEN DRAWINGS ARE REPRODUCED BY ANY MEANS. USE THE GRAPHIC SCALE BAR IN THE DRAWING OR TITLE BLOCK TO DETERMINE THE ACTUAL SCALE.

NO.	DATE	REVISIONS	BY

DATE:	FEBRUARY 2026
PROJECT MGR:	RCC
DRAWN BY:	JAB
CHECKED BY:	RCC
SCALE:	

2026 © Kentucky Engineering Group, PLLC

P.O. Box 1034
VERSAILLES, KENTUCKY 40383
KENTUCKY ENGINEERING GROUP, PLLC

WATER TREATMENT PLANT
GAC FACILITY
FOR THE
CITY OF CYNTHIANA

HVAC SYMBOLS, ABBREVIATIONS & SCHEDULES

COMMONWEALTH OF KENTUCKY
BENJAMIN I. MURPHY
25348
LICENSED PROFESSIONAL ENGINEER

PROJECT NO.
25009

SHEET NO.
H-1

SHEET NOTES:

1. PROVIDE WALL-MOUNT HEAT PUMP INSTALLED PER WALL-MOUNT HEAT PUMP DETAIL 18" AFF TO BOTTOM
2. PROVIDE 20"X 8" SUPPLY DUCT AND 20"X 12" RETURN DUCT
3. PROVIDE ALUMINUM SUPPLY AND RETURN REGISTERS
4. PROVIDE HEAT PUMP LEAD/LAG TEMPERATURE CONTROLLER
5. PROVIDE LOUVER INSTALLED 16" AFF TO BOTTOM. SEE LOUVER INSTALLATION DETAIL
6. PROVIDE FAN INSTALLED 108" AFF TO BOTTOM. SEE FAN INSTALLATION DETAIL
7. PROVIDE UNIT HEATER INSTALLED WITH WALL BRACKET MOUNTED AT TOP OF CMU BLOCK
8. PROVIDE HIGH VOLUME LOW SPEED FAN SUPPORTED FROM CEILING STRUCTURAL STEEL PER MFR INSTRUCTIONS

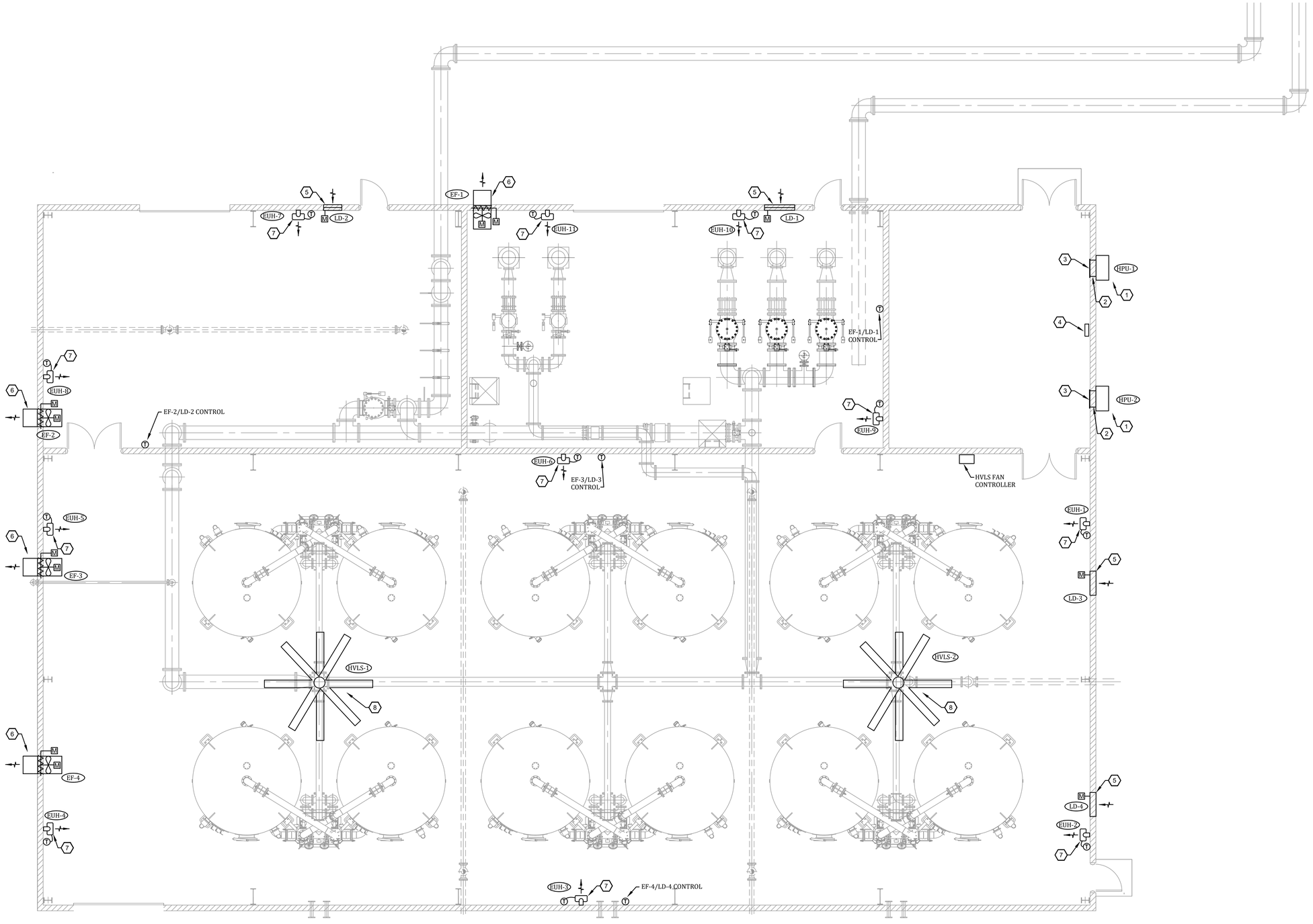

GAC BUILDING HVAC PLAN

SCALE: 3/16" = 1'-0"

IT IS A VIOLATION OF LAW FOR ANY PERSON TO ALTER THIS DRAWING WITHOUT WRITTEN PERMISSION FROM KENTUCKY ENGINEERING GROUP, PLLC AND ACTING UNDER THE DIRECTION OF A LICENSED ENGINEER.

THIS DRAWING WAS PREPARED AT THE SCALE INDICATED. INACCURACIES IN THE STATED SCALE MAY BE INTRODUCED WHEN DRAWINGS ARE REPRODUCED BY ANY MEANS. USE THE GRAPHIC SCALE BAR IN THE DRAWING OR TITLE BLOCK TO DETERMINE THE ACTUAL SCALE.

NO.	DATE	REVISIONS	BY

DATE:	FEBRUARY 2026
PROJECT MGR:	RCC
DRAWN BY:	JAB
CHECKED BY:	RCC
SCALE:	

2026 © Kentucky Engineering Group, PLLC

P.O. Box 1034
VERSAILLES, KENTUCKY 40383
KENTUCKY ENGINEERING GROUP, PLLC

WATER TREATMENT PLANT
GAC FACILITY
FOR THE
CITY OF CYNTHIANA

GAC BUILDING HVAC PLAN

COMMONWEALTH OF KENTUCKY
BENJAMIN L MURPHY
25345
LICENSED PROFESSIONAL ENGINEER

PROJECT NO. 25009

SHEET NO. H-2

ELECTRICAL ABBREVIATIONS

A	AMPERE
AF	AMPERE FRAME
AFF	ABOVE FINISHED FLOOR
AFD	ADJUSTABLE FREQUENCY DRIVE
AT	AMPERE TRIP
ATS	AUTOMATIC TRANSFER SWITCH
AWG	AMERICAN WIRE GAUGE
BC	BARE COPPER
C	CONDUIT (RACEWAY)
@	AT
CB	CIRCUIT BREAKER
CCTV	CLOSED CIRCUIT TELEVISION
CKT	CIRCUIT
C/L	CENTERLINE
CLG	CEILING
CP	CONTROL PANEL
CT	CURRENT TRANSFORMER OR CONSTANT TORQUE
CTL	CONTROL
CU	COPPER OR CONDENSING UNIT
Δ/Y	DELTA/WYE
DB	DIRECT BURIAL
DN	DOWN
DPST	DOUBLE POLE-SINGLE THROW
EC	EMPTY CONDUIT
EF	EXHAUST FAN
EG	EQUIPMENT GROUND
EGC	EQUIPMENT GROUND CONDUCTOR
EJ	EXPANSION JOINT
EL	ELEVATION
ELEC	ELECTRIC
EOL	END-OF-LINE
EMERG	EMERGENCY
EUH	ELECTRIC UNIT HEATER
EWC	ELECTRIC WATER COOLER
EWH	ELECTRIC WALL HEATER/WATER HEATER
EX	EXISTING
FA	FIRE ALARM
FACP	FIRE ALARM CONTROL PANEL
FO	FIBER OPTIC
FVNR	FULL VOLTAGE, NON-REVERSING
GEC	GROUNDING ELECTRODE CONDUCTOR
GFCI OR GFI	GROUND FAULT CURRENT INTERRUPTING
GND	GROUND
HD	HEAVY DUTY
HOA	HAND-OFF-AUTO SELECTOR SWITCH
HP	HORSEPOWER
J OR JB	JUNCTION BOX
KVA	KILOVOLT-AMPERES
KWH	KILOWATT-HOUR
KCMIL	THOUSAND CIRCULAR MILS
LF	LIGHTING FIXTURE (LUMINAIRE)
LM	LUMEN
LTG	LIGHTING
LTS	LIGHTS
LS	LIMIT SWITCH
LV	LOW VOLTAGE
MCB	MAIN CIRCUIT BREAKER
MCP	MOTOR CIRCUIT PROTECTOR
MCC	MOTOR CONTROL CENTER
MDP	MAIN DISTRIBUTION PANEL
MFR	MANUFACTURER
MH	MANHOLE
MIN	MINIMUM
MLO	MAIN LUGS ONLY
MTD	MOUNTED
MV	MEDIUM VOLTAGE
NA	NOT APPLICABLE
NC	NORMALLY CLOSED
NEC	NATIONAL ELECTRICAL CODE
NO	NORMALLY OPEN
NTS	NOT TO SCALE
OH	OVERHEAD
OL	OVERLOAD
P	POLE
OT	OVER TEMPERATURE
PH OR Ø	PHASE
PNL	PANEL
PVC	POLY-VINYL CHLORIDE
PWR	POWER
RECEPT	RECEPTACLE
SHT	SHEET
SP	SINGLE POLE
SPD	SURGE PROTECTION DEVICE
SS	STAINLESS STEEL
STD	STANDARD
STIC	SHIELDED TWISTED INSTRUMENT CABLE
SW	SWITCH
TB	TERMINAL BOX
TM	THERMAL MAGNETIC
UG	UNDERGROUND
UH	UNIT HEATER
V	VOLTAGE OR VOLTS
W	WIRE
WP	WEATHERPROOF
W/	WITH
XFMR	TRANSFORMER

ELECTRICAL PLAN SYMBOLS

	ELECTRICAL CIRCUIT: SHORT=PHASE CONDUCTOR; LONG = NEUTRAL, DASHED = EQUIPMENT GROUND
	EMERGENCY CIRCUIT
$3	SWITCH: 3=3 WAY; 4=4 WAY; K=KEY; WP= WEATHERPROOF; M=MOTOR STARTER; PL=PILOT LT
	DUPLEX RECEPTACLE: WP = WEATHERPROOF; GFI = GROUND FAULT; NUMBER = MOUNTING HEIGHT
	SINGLE RECEPTACLE
	208 or 240 VOLT RECEPTACLE
	DUPLEX RECEPTACLE, FLUSH FLOORBOX MOUNTED
	SPECIAL PURPOSE RECEPTACLE OUTLET
T	THERMOSTAT
M	MOTOR
J	JUNCTION BOX - SMALL
J	JUNCTION BOX - FLUSH-MOUNTED
	SAFETY SWITCH - NONFUSED UNLESS NOTED OTHERWISE
	MAGNETIC COMBINATION STARTER - THREE PHASE
	MAGNETIC COMBINATION STARTER - SINGLE PHASE
	TELECOM OUTLET: D = DATA; T = TELEPHONE; C = CABLE; NUMBER = QTY OF CABLES & JACKS
	CONDUIT TURNED UP
	CONDUIT TURNED DOWN
S	WALL MOUNTED SPEAKER OR ALARM HORN
	PANELBOARD (SURFACE MOUNTED)
	PANELBOARD (FLUSH MOUNTED IN WALL)
	HEATER-WALL MOUNTED
EF	EXHAUST FAN/VENTILATOR
S	SPEAKER GENERAL
C	CLOCK
	EXISTING POWER POLE
	NEW POWER POLE
OR	LIGHTING POLE
	PHOTO CELL
MH	MANHOLE
PB	PULLBOX
	MUSHROOM HEAD EMERGENCY SWITCH
XX	KEYNOTE
C	CALL SWITCH
M	PASSIVE INFRARED MOTION DETECTOR
NEMA XX	ALL WORK IN THE ROOM/AREA SHALL CONFORM TO THE NEMA RATING INDICATED
EU	ELECTRICAL LINE UNDERGROUND
EO	ELECTRICAL LINE OVERHEAD
IU	INSTRUMENTATION LINE UNDERGROUND
IO	INSTRUMENTATION LINE OVERHEAD
TU	TELEPHONE LINE UNDERGROUND
TO	TELEPHONE LINE OVERHEAD
	GROUND ROD

ELECTRICAL DIAGRAM SYMBOLS

	TRANSFORMER
	CAPACITOR
	GROUND
	CURRENT TRANSFORMER
	POTENTIAL TRANSFORMER
	CIRCUIT BREAKER (GENERAL)
	CIRCUIT BREAKER, THERMAL-MAGNETIC
	CIRCUIT BREAKER, MAGNETIC-ONLY
	CIRCUIT BREAKER (DRAWOUT)
GF	GROUND FAULT PROTECTED CIRCUIT BREAKER
	RELAY CONTACTS (NORMALLY OPENED)
	RELAY CONTACTS (NORMALLY CLOSED)
	THERMAL OVERLOAD PROTECTION
	FUSE
	DOT INDICATES A CONNECTION OF TWO WIRES
	TERMINALS FOR CONNECTION OF REMOTE WIRING
R	RELAY/CONTACTOR COIL: C = CONTRACTOR; CR = CONTROL RELAY; TR = TIMING RELAY; M = MOTOR
H O A	HAND-OFF-AUTOMATIC SWITCH
X	FULL VOLTAGE NON-REVERSING MOTOR STARTER; X = NEMA SIZE
X	PILOT LIGHT: R = RED; G = GREEN; A = AMBER; W = WHITE
X	PILOT LIGHT - PUSH-TO-TEST
	MOTOR
	FUSED DISCONNECT SWITCH
	FLOAT SWITCH
	TEMPERATURE SWITCH (THERMOSTAT)
	PRESSURE SWITCH
	LIMIT SWITCH
	FLOW SWITCH
SV OR	SOLENOID VALVE COIL
ETM	ELAPSED TIME METER
K	KEY INTERLOCK
	BATTERY
	PUSHBUTTONS, N.C. & N.O. RESPECTIVELY
	SELECTOR SWITCH - TWO POSITION
	FUSED CUTOUT
	SECTIONALIZING SWITCH (3 PHASE)
	TIMER RELAY CONTACT: NORMALLY OPEN - TIMED OPEN UPON DEENERGIZATION
	TIMER RELAY CONTACT: NORMALLY CLOSED -TIMED CLOSE UPON DEENERGIZATION
	TIMER RELAY CONTACT: NORMALLY OPEN - TIMED CLOSE UPON ENERGIZATION
	TIMER RELAY CONTACT: NORMALLY CLOSED -TIMED OPEN UPON ENERGIZATION
	TRANSFER SWITCH
	GENERATOR
	EXTERNAL WIRING
	EMERGENCY STOP BUTTON

ELECTRICAL DEVICE MOUNTING HEIGHT SCHEDULE

DEVICE	HEIGHT AFF	REMARKS
RECEPTACLE - LOW	1'-4"	TO BOTTOM OF DEVICE BOX
LIGHT SWITCH	4'-0"	TO BOTTOM OF DEVICE BOX
CONTROL STATIONS & PUSH-BUTTONS	4'-0"	TO BOTTOM OF DEVICE BOX
PANELBOARDS & CONTROL PANELS	6'-6"	TO TOP OF BOX
SAFETY SWITCH	4'-0"	TO TOP OF BOX
THERMOSTAT	4'-8"	TO BOTTOM OF DEVICE BOX
EMERGENCY LIGHT FIXTURES	7'-4"	TO BOTTOM OF DEVICE BOX
EXIT SIGNS - WALL MOUNTED	8'-0"	TO TOP; MAINTAIN 2" CLEARANCE BELOW CEILING

LIGHT FIXTURE SCHEDULE

TYPE	MANUFACTURER	CATALOG SERIES	LAMPS	VOLTAGE	MOUNTING	DESCRIPTION	SYMBOL
LF-1	HOLOPHANE	EMS LED	12000 LM LED	120V	CHAIN	LINEAR FIXTURE, FIBERGLASS N4X WET LOCATION, FROSTED ACRYLIC DIFFUSER, 6KV/3KA SURGE, 5-YR WARRANTY, MEDIUM DISTRIBUTION, 4000K, 80 CRI, 75 WATT	
LF-1E	HOLOPHANE	EMS LED	12000 LM LED	120V	CHAIN	SAME AS LF-1 WITH 90 MINUTE EMERGENCY BATTERY, 1400 LM	
LF-2	HOLOPHANE	DLTL	LED	120V	UNIVERSAL	EXIT FIXTURE, WET LOCATION THERMOPLASTIC HOUSING, NICKEL-CADMIUM BATTERY WITH TEST SWITCH, 3-YR WARRANTY, RED, SINGLE-FACE	
LF-3	HOLOPHANE	CZAFP	635 LM LED	120V	WALL	EMERGENCY EGRESS FIXTURE, WET LOCATION, ALUMINUM POWDER-COAT, COLOR SELECTION BY OWNER, NORMALLY-ON PHOTOCELL, COLD RATED TO -22F, 90-MIN BATTERY, FORWARD THROW, 5-YR WARRANTY	
LF-4	HOLOPHANE	HLWPC2	11700 LM LED	120V	WALL	WALLPACK, ALUMINUM POWDER-COAT, WET LOCATION IP-65, COLOR SELECTION BY OWNER 10KV/10KA SURGE, FULL CUTOFF, 4000K, TYPE 3 MEDIUM DISTRIBUTION, 70 CRI, 5-YEAR WARRANTY, 115W	
LF-5	HOLOPHANE	MGLEDM	15400 LM LED	120V	POLE	AREA FIXTURE, 4000K COLOR, MEDIUM OPTICS WITH REFRACTOR, FIELD-ADJUSTABLE OUTPUT, SIDE-SHIELD FOR FULL-CUTOFF, SURGE-PROTECTED, NEMA 4X, TILTABLE, WITH 5-YEAR WARRANTY AND MATCHING 14FT POLE	

PANEL: PP-GAC
ENCLOSURE: NEMA 1
MOUNTING: MCC
LOCATION: GAC BLDG ELEC ROOM

VOLTAGE: 480/277V, 3Ø, 4W
MAINS AMPACITY: 225
MAIN C.B. SIZE: 225
TOTAL SPACES: 42

CIRCUIT DESCRIPTION	VA	POLES	BREAKER	NO.	PHASE A VA	PHASE B VA	PHASE C VA	NO.	BREAKER	POLES	VA	CIRCUIT DESCRIPTION
GAC VALVES EOV-51, 52, 53	300	3	15A	1	2820	----------	----------	2	15A	3	2520	EUH-5
	300			3	----------	2820	----------	4			2520	
	300			5	----------	----------	2820	6			2520	
HPU-1 HEAT PUMP	3250	3	15A	7	5770	----------	----------	8	15A	3	2520	EUH-6
	3250			9	----------	5770	----------	10			2520	
	3250			11	----------	----------	5770	12			2520	
HPU-2 HEAT PUMP	3250	3	15A	13	6685	----------	----------	14	20A	3	3435	EUH-7
	3250			15	----------	6685	----------	16			3435	
	3250			17	----------	----------	6685	18			3435	
EUH-1	2520	3	15A	19	5955	----------	----------	20	20A	3	3435	EUH-8
	2520			21	----------	5955	----------	22			3435	
	2520			23	----------	----------	5955	24			3435	
EUH-2	2520	3	15A	25	5040	----------	----------	26	15A	3	2520	EUH-9
	2520			27	----------	5040	----------	28			2520	
	2520			29	----------	----------	5040	30			2520	
EUH-3	2520	3	15A	31	5040	----------	----------	32	15A	3	2520	EUH-10
	2520			33	----------	5040	----------	34			2520	
	2520			35	----------	----------	5040	36			2520	
EUH-4	2520	3	15A	37	5040	----------	----------	38	15A	3	2520	EUH-11
	2520			39	----------	5040	----------	40			2520	
	2520			41	----------	----------	5040	42			2520	
TOTAL VA PER PHASE:					36350	36350	36350					
TOTAL AMPS PER PHASE					131.2	131.2	131.2	TOTAL PANEL VA: 109050				

NOTES:

PANEL: LP-GAC
ENCLOSURE: NEMA 1
MOUNTING: SURFACE
LOCATION: GAC BLDG ELEC RM

VOLTAGE: 208/120V, 3Ø, 4W
MAINS AMPACITY: 200A
MAIN C.B. SIZE: 150A
BREAKER SPACES: 54

CIRCUIT DESCRIPTION	VA	POLES	BREAKER	NO.	PHASE A VA	PHASE B VA	PHASE C VA	NO.	BREAKER	POLES	VA	CIRCUIT DESCRIPTION
SPD		3	30A	1	600	----------	----------	2	20A	1	600	ELEC RM RECEPTS NORTH
				3	----------	600	----------	4	20A	1	600	ELEC RM RECEPTS SOUTH
				5	----------	----------	600	6	20A	1	600	GAC PUMP RM RECEPTS NORTH
GAC PUMP & ELEC RM LIGHTING	1200	1	20A	7	2000	----------	----------	8	20A	1	800	GAC PUMP RM RECEPTS SOUTH
EXTERIOR LIGHTING	1400	1	20A	9	----------	2200	----------	10	20A	1	800	SAMPLE RM RECEPTS NORTH
IDF-GAC NETWORK CABINET	500	1	20A	11	----------	----------	1300	12	20A	1	800	SAMPLE RM RECEPTS SOUTH
DCC-GAC	500	1	20A	13	1100	----------	----------	14	20A	1	600	GAC TANK RM RECEPTS EAST
GAC BACKWASH FLOW METER	100	1	15A	15	----------	1100	----------	16	20A	1	1000	GAC TANK RM RECEPTS SOUTH
GAC BYPASS FLOW METER	100	1	15A	17	----------	----------	700	18	20A	1	600	GAC TANK RM RECEPTS WEST
PRE-CHEM SAMPLE PUMP	1200	1	25A	19	1800	----------	----------	20	20A	1	600	GAC TANK RM RECEPTS NORTH
POST-CHEM SAMPLE PUMP	1200	1	25A	21	----------	2700	----------	22	20A	2	1500	SECURITY GATE OPERATOR
GAC ADSORBER RM LIGHTING	1800	1	20A	23	----------	----------	3300	24			1500	
HVLS-1 FAN	1200	3	15A	25	3600	----------	----------	26	30A	3	2400	BRIDGE CRANE
	1200			27	----------	3600	----------	28			2400	
	1200			29	----------	----------	3600	30			2400	
HVLS-2 FAN	1200	3	15A	31	1700	----------	----------	32	20A	1	500	SECURITY GATE ACCESSORY CKT
	1200			33	----------	1200	----------	34	20A			SPARE
	1200			35	----------	----------	1700	36	20A	1	500	GENSET BATTERY CHARGER
TURBIDITY/CHLORINE AIT-51/52	100	1	15A	37	300	----------	----------	38	15A	1	200	GENSET ANTI-COND. HEATER
SPARE		1	15A	39	----------	2000	----------	40	25A	2	2000	GENSET BLOCK HEATER
TOC ANALYZER AIT-53	300	1	15A	41	----------	----------	2300	42			2000	
TOTAL VA PER PHASE:					11100	13400	13500					
TOTAL AMPS PER PHASE:					92.5	111.7	112.5	TOTAL PANEL VA: 38000				

NOTES:
1. PROVIDE INTEGRAL SPD, 80KA MIN
2. PROVIDE SPARE 20A AND 15A BREAKERS IN THE SPARE CIRCUIT SLOTS FROM 43 TO 54

IT IS A VIOLATION OF LAW FOR ANY PERSON TO ALTER THIS DRAWING WITHOUT WRITTEN PERMISSION FROM KENTUCKY ENGINEERING GROUP, PLLC AND ACTING UNDER THE DIRECTION OF A LICENSED ENGINEER.

THIS DRAWING WAS PREPARED AT THE SCALE INDICATED. INACCURACIES IN THE STATED SCALE MAY BE INTRODUCED WHEN DRAWINGS ARE REPRODUCED BY ANY MEANS. USE THE GRAPHIC SCALE BAR IN THE DRAWING OR TITLE BLOCK TO DETERMINE THE ACTUAL SCALE.

NO.	DATE	REVISIONS	BY

DATE:	FEBRUARY 2026
PROJECT MGR:	RCC
DRAWN BY:	JAB
CHECKED BY:	RCC
SCALE:	

2026 © Kentucky Engineering Group, PLLC

P.O. Box 1034
VERSAILLES, KENTUCKY 40383
KENTUCKY ENGINEERING GROUP, PLLC

WATER TREATMENT PLANT
GAC FACILITY
FOR THE
CITY OF CYNTHIANA

ELECTRICAL SYMBOLS, ABBREVIATIONS & SCHEDULES



PROJECT NO. 25009

SHEET NO. E-1

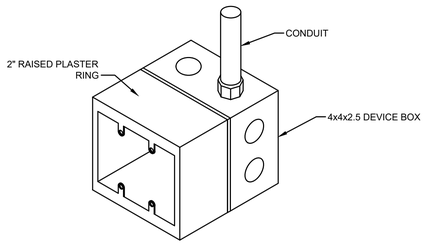

QUAD DEVICE BOX DETAIL

NOT TO SCALE

ALL NEW DEVICE BOXES SHALL HAVE A 2" RAISED PLASTER RING AND 4"x4" BOX INSTALLED IN MASONRY INSTALLATIONS.

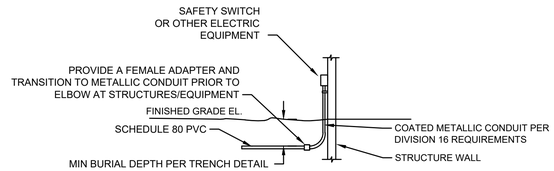

NOTE:
ALL UNDERGROUND PVC CONDUITS SHALL TRANSITION TO METALLIC PRIOR TO EMERGING FROM GRADE OR SLAB. SEE SECTION 16130 FOR ACCEPTABLE CONDUIT TYPES

TYPICAL UNDERGROUND PVC CONDUIT TRANSITION TO METALLIC CONDUIT

NOT TO SCALE

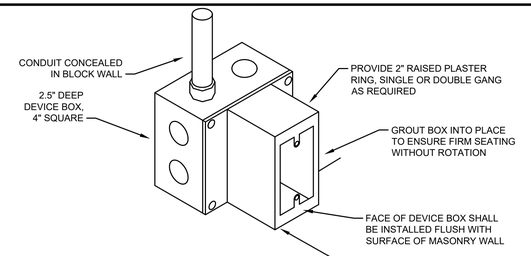

MASONRY DEVICE BOX DETAIL

NOT TO SCALE

TRENCHING NOTES:

- PROVIDE PULL CORD IN ALL CONDUITS.
- UTILITY MARKER TAPE SHALL RUN THE ENTIRE LENGTH OF DUCT BANK.
- MAINTAIN MINIMUM 12" SPACING BETWEEN INSTRUMENTATION AND POWER, UNLESS FIBER OPTIC CABLES ARE USED.
- MAINTAIN MINIMUM 36" SPACING BETWEEN OTHER SITE PIPING, INCLUDING WATER, AND GAS.

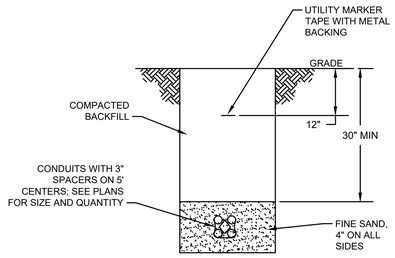

TYPICAL TRENCH DETAIL

N.T.S.

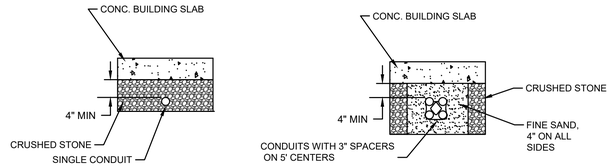

SINGLE CONDUIT MULTIPLE CONDUITS

CONDUIT INSTALLATION UNDER BUILDING SLAB

N.T.S.

NOTE: CONDUITS SHALL BE INSTALLED DEEPER WHERE NECESSARY TO PREVENT CURVED PORTION OF ELBOW FROM BEING EXPOSED ABOVE GRADE

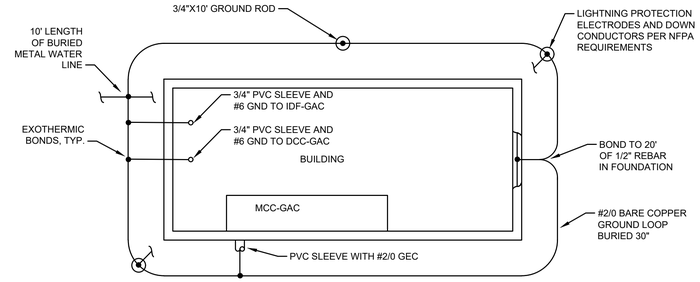

TYPICAL BUILDING GROUNDING DETAIL

N.T.S.

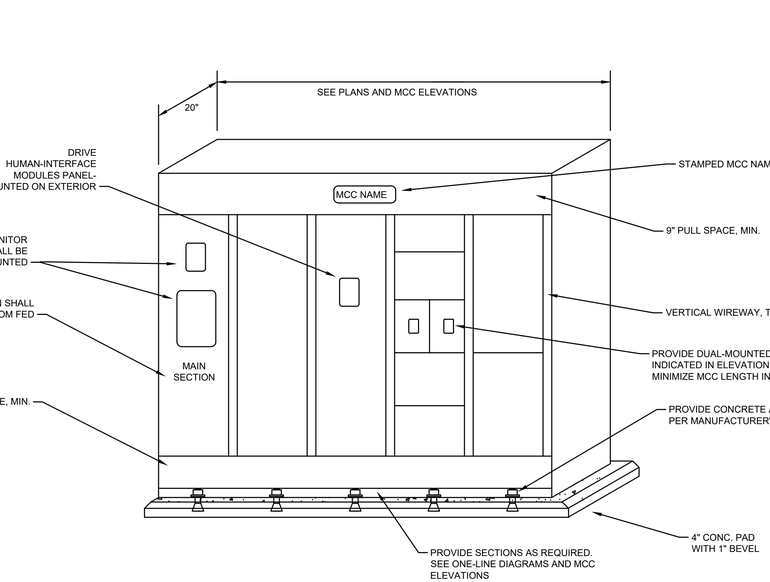

MOTOR CONTROL CENTER INSTALLATION DETAIL

NOT TO SCALE

NOTE: SEE MCC ELEVATION FOR ACTUAL PLACEMENT OF BUCKETS/UNITS

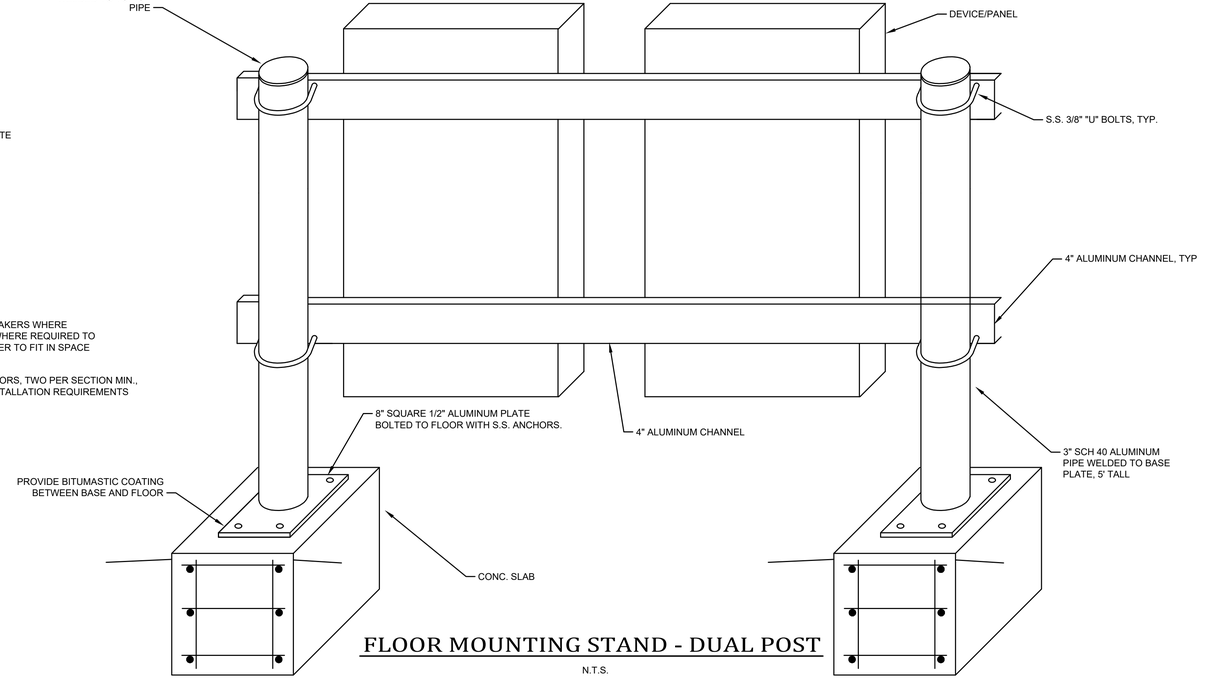

FLOOR MOUNTING STAND - DUAL POST

N.T.S.

IT IS A VIOLATION OF LAW FOR ANY PERSON TO ALTER THIS DRAWING WITHOUT WRITTEN PERMISSION FROM KENTUCKY ENGINEERING GROUP, PLLC AND ACTING UNDER THE DIRECTION OF A LICENSED ENGINEER.

THIS DRAWING WAS PREPARED AT THE SCALE INDICATED. INACCURACIES IN THE STATED SCALE MAY BE INTRODUCED WHEN DRAWINGS ARE REPRODUCED BY ANY MEANS. USE THE GRAPHIC SCALE BAR IN THE DRAWING OR TITLE BLOCK TO DETERMINE THE ACTUAL SCALE.

NO.	DATE	REVISIONS	BY

DATE:	FEBRUARY 2026
PROJECT MGR:	RCC
DRAWN BY:	JAB
CHECKED BY:	RCC
SCALE:	

2026 © Kentucky Engineering Group, PLLC

P.O. Box 1034
VERSAILLES, KENTUCKY 40383
KENTUCKY ENGINEERING GROUP, PLLC

WATER TREATMENT PLANT
GAC FACILITY
FOR THE
CITY OF CYNTHIANA

ELECTRICAL DETAILS

3/27/2026
COMMONWEALTH OF KENTUCKY
BENJAMIN I. MURPHY
25348
LICENSED PROFESSIONAL ENGINEER

PROJECT NO.
25009

SHEET NO.
E-2

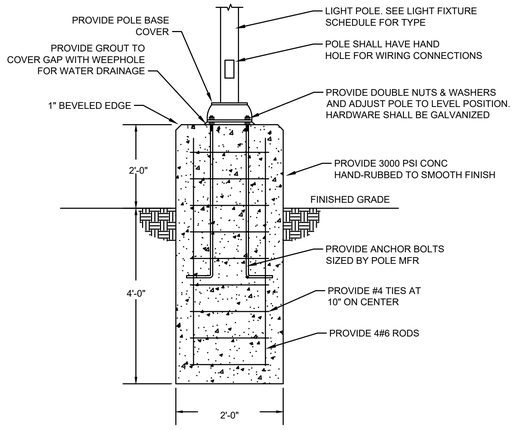

LIGHT POLE BASE DETAIL

NOT TO SCALE

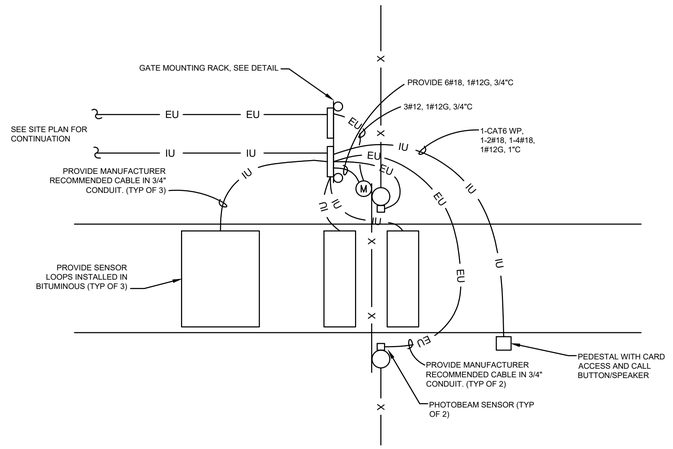

TYPICAL SECURITY GATE DETAIL (PLAN VIEW)

N.T.S.

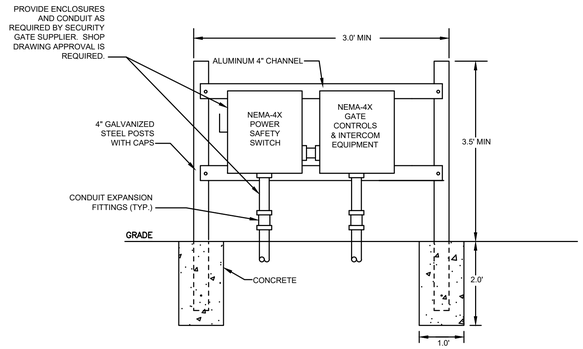

GATE MOUNTING RACK DETAIL

N.T.S.

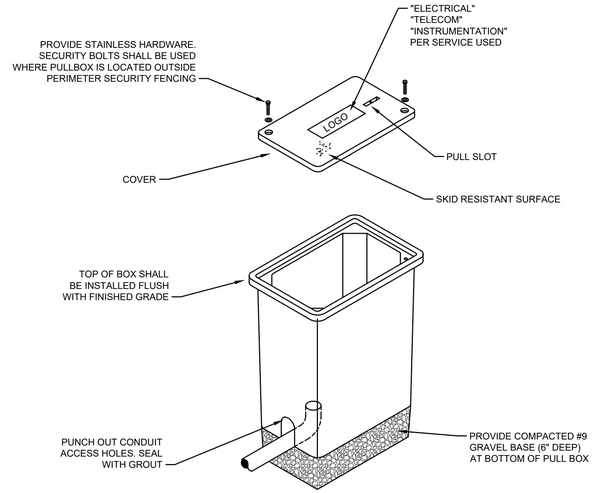

ELECTRICAL PULL BOX DETAIL

NOT TO SCALE

NOTES:

- PROVIDE PULL BOXES AS REQUIRED BY NEC REQUIREMENTS. MINIMUM SIZE OF 20"L X 10"W X 18"D IS REQUIRED, BUT SHALL BE INCREASED WHERE LARGER CONDUCTORS REQUIRE ADDITIONAL BENDING SPACE
- UTILIZE STACKABLE BOXES IF NECESSARY TO EXTEND PULLBOX TO DEPTH OF 30" MIN
- MINIMUM TIER 22 LOAD RATING IS REQUIRED

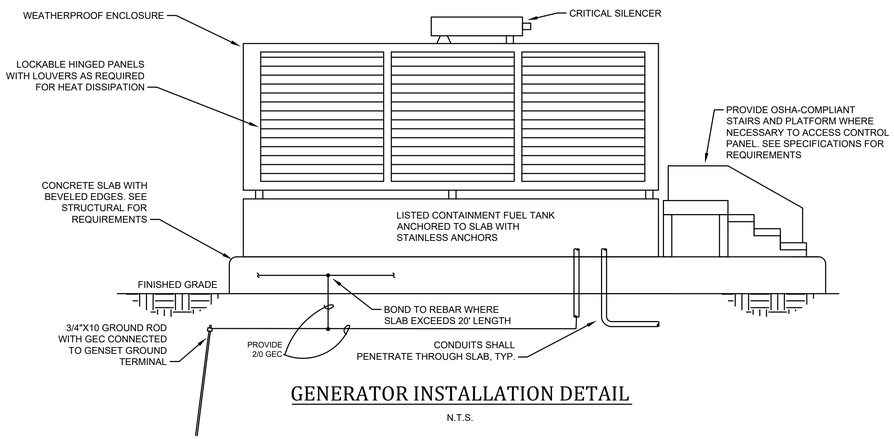

GENERATOR INSTALLATION DETAIL

N.T.S.

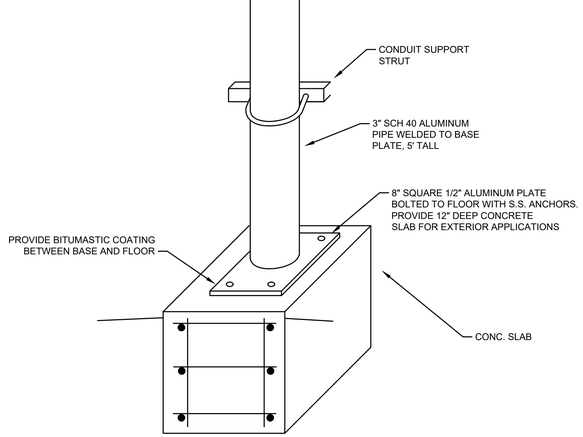

FLOOR MOUNTING STAND

N.T.S.

IT IS A VIOLATION OF LAW FOR ANY PERSON TO ALTER THIS DRAWING WITHOUT WRITTEN PERMISSION FROM KENTUCKY ENGINEERING GROUP, PLLC AND ACTING UNDER THE DIRECTION OF A LICENSED ENGINEER.

THIS DRAWING WAS PREPARED AT THE SCALE INDICATED. INACCURACIES IN THE STATED SCALE MAY BE INTRODUCED WHEN DRAWINGS ARE REPRODUCED BY ANY MEANS. USE THE GRAPHIC SCALE BAR IN THE DRAWING OR TITLE BLOCK TO DETERMINE THE ACTUAL SCALE.

NO.	DATE	REVISIONS	BY

DATE:	FEBRUARY 2026
PROJECT MGR:	RCC
DRAWN BY:	JAB
CHECKED BY:	RCC
SCALE:	

2026 © Kentucky Engineering Group, PLLC

P.O. Box 1034
VERSAILLES, KENTUCKY 40383
KENTUCKY ENGINEERING GROUP, PLLC

WATER TREATMENT PLANT
GAC FACILITY
FOR THE
CITY OF CYNTHIANA

ELECTRICAL DETAILS
CONTINUED

COMMONWEALTH OF KENTUCKY
BENJAMIN L. MURPHY
25348
LICENSED PROFESSIONAL ENGINEER

PROJECT NO.
25009

SHEET NO.
E-3

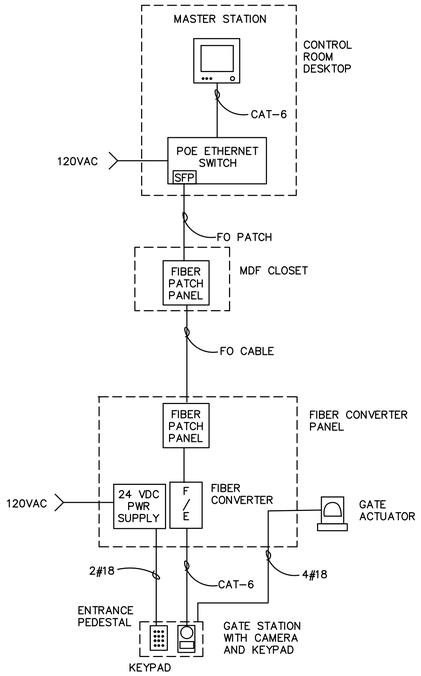

SECURITY GATE VIDEO INTERCOM DIAGRAM

NOTES:

- A #12EGC SHALL BE INSTALLED IN EACH CONDUIT EXCEPT FOR FO CONDUIT

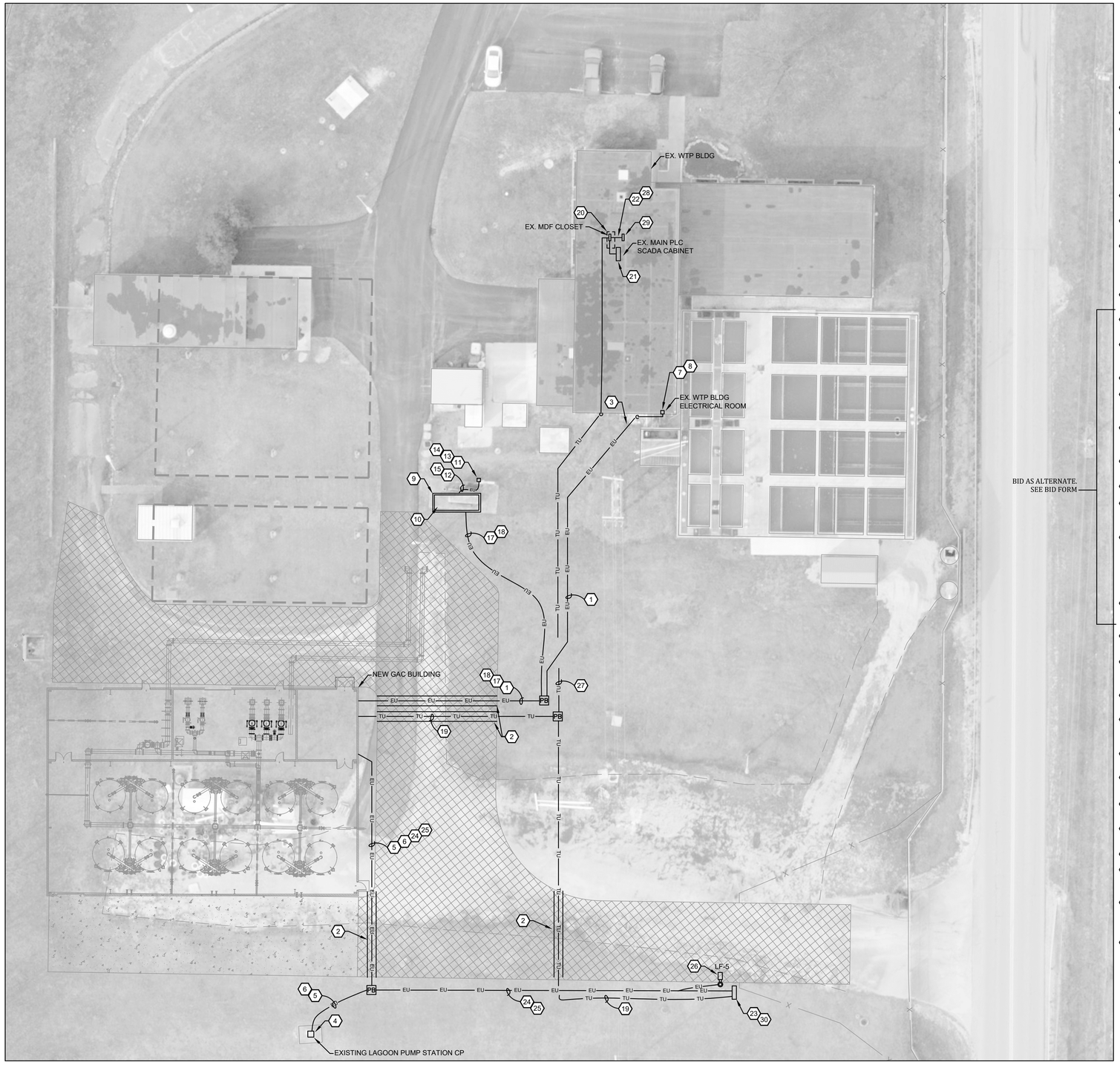

GENERAL SHEET NOTES:

- EXTERIOR ELECTRICAL EQUIPMENT SHALL BE NEMA 4X S.S. 316

SHEET NOTES:

1. PROVIDE NEW MCC-GAC FEEDER PER ONE-LINE DIAGRAM
2. PROVIDE STEEL COVER PIPE UNDER ROADWAY
3. PROVIDE UNDERGROUND LOCATION OF EXISTING CONDUITS. MARK AND PROTECT THROUGHOUT CONSTRUCTION
4. DEENERGIZE, DISCONNECT, AND ABANDON EXISTING UNDERGROUND 480V FEEDER FOR THE LAGOON PUMP STATION
5. PROVIDE NEW LAGOON PUMP CP FEEDER FROM MCC-GAC PER ONE-LINE DIAGRAM
6. PROVIDE 2#14, 4#14 SPARE, 1#14G, 1"C FROM LAGOON PUMP CP TO DCC-GAC
7. PROVIDE NEW 600A L600AWK BREAKER INSTALLED BETWEEN EXISTING MDP-MAIN AND ATS. BREAKER CABINET SHALL BE 20.4" WIDE MAXIMUM AND SHALL BE INSTALLED SUCH THAT IT IS FLUSH WITH THE FACE OF THE ATS. PROVIDE FLOOR STAND
8. PROVIDE TAP FEEDER FROM ATS TO NEW FDR-GAC 600A BREAKER PER ONE-LINE DIAGRAM
9. PROVIDE 18' X 7' CONC. SLAB. SEE CONC. SLAB DETAIL. DEMOLISH EX. ASPHALT PAVEMENT
10. PROVIDE NEW GENERATOR PER ONE-LINE DIAGRAM. RELOCATE EXISTING GENERATOR TO NEW LOCATION ON SAME SITE PER OWNERS INSTRUCTIONS
11. DEMOLISH EX. PORTABLE GENERATOR RECEPTACLES
12. PROVIDE GENERATOR POWER CIRCUIT PER ONE-LINE FROM GENSET TO EXISTING CONNECTION CABINET
13. PROVIDE 20 PRE-INSULATED 3/0 POLARIS SPLICE CONNECTORS AND CONNECT NEW GENSET CABLING TO EXISTING CABLING
14. PROVIDE NEMA 4X GENSET E-STOP BUTTON MTD ON EXISTING RACK
15. PROVIDE 2#14, 1#14G, 3/4"C FOR E-STOP CIRCUIT
16. PROVIDE 6#14, 1#14G, 3/4"C AND CONNECT TO EXISTING ATS CONTROL WIRING FOR AUTOMATIC GENSET START UPON POWER OUTAGE
17. PROVIDE THE FOLLOWING GENSET CIRCUITS FROM PANEL LP-GAC:
    2#10 BLOCK HEATER
    2#12 CHARGER
    2#12 ANTI-COND. HEATER
    1#10G, 1"C
    UNDER BASE BID, PROVIDE SPARE 1"C TO PULLBOX
18. PROVIDE 8#14, 1#14G, 1"C FROM GENSET TO DCC-GAC. UNDER BASE BID PROVIDE SPARE 1"C TO PULLBOX
19. PROVIDE FO CABLE, 1.5"C. SEE NETWORK ARCHITECTURE DIAGRAM
20. PROVIDE FIBER PATCH PANEL AND FIBER-TO-ETHERNET CONVERTERS IN EX. MDF CLOSET
21. PROVIDE CAT-6 FROM FIBER CONVERTER TO EX. MAIN PLC PANEL SWITCH
22. PROVIDE 2-30 FT FO PATCH CABLES FROM FIBER PATCH PANEL TO NEW VIDEO SURVEILLANCE SWITCH
23. PROVIDE SECURITY GATE MOUNTING RACK PER SECURITY GATE MOUNTING RACK DETAIL
24. PROVIDE 4#8, 1#8G, 1"C FROM SECURITY GATE RACK TO PANEL LP-GAC
25. PROVIDE 2#10, 1#10G, 1"C FROM LIGHT POLE TO GAC BLDG LIGHTING CONTACTOR
26. PROVIDE LIGHT POLE AND FOUNDATION. SEE LIGHT POLE DETAIL
27. PROVIDE 2-FO CABLES, 2"C TO MDF CLOSET
28. PROVIDE CAT6 AND PROVIDE NEW SECURITY GATE MASTER INTERCOM STATION AT CONTROL ROOM DESK
29. PROVIDE NEW VIDEO SURVEILLANCE SWITCH TO REPLACE EXISTING SWITCH AND PROVIDE NEW VIDEO SURVEILLANCE WORKSTATION TO REPLACE EXISTING NVR
30. PROVIDE SECURITY GATE ELECTRICAL CONNECTIONS AND AUDIO/VIDEO INTERCOM SYSTEM. SEE SECURITY GATE DETAIL

BID AS ALTERNATE. SEE BID FORM

IT IS A VIOLATION OF LAW FOR ANY PERSON TO ALTER THIS DRAWING WITHOUT WRITTEN PERMISSION FROM KENTUCKY ENGINEERING GROUP, PLLC AND ACTING UNDER THE DIRECTION OF A LICENSED ENGINEER.

THIS DRAWING WAS PREPARED AT THE SCALE INDICATED. INACCURACIES IN THE STATED SCALE MAY BE INTRODUCED WHEN DRAWINGS ARE REPRODUCED BY ANY MEANS. USE THE GRAPHIC SCALE BAR IN THE DRAWING OR TITLE BLOCK TO DETERMINE THE ACTUAL SCALE.

NO.	DATE	REVISIONS	BY

DATE:	FEBRUARY 2026
PROJECT MGR:	RCC
DRAWN BY:	JAB
CHECKED BY:	RCC
SCALE:	1" = 20'-0"

2026 © Kentucky Engineering Group, PLLC

P.O. Box 1034
VERSAILLES, KENTUCKY 40383
KENTUCKY ENGINEERING GROUP, PLLC

WATER TREATMENT PLANT
GAC FACILITY
FOR THE
CITY OF CYNTHIANA

ELECTRICAL SITE PLAN

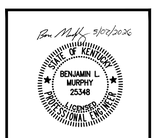

PROJECT NO.
25009

SHEET NO.
E-4

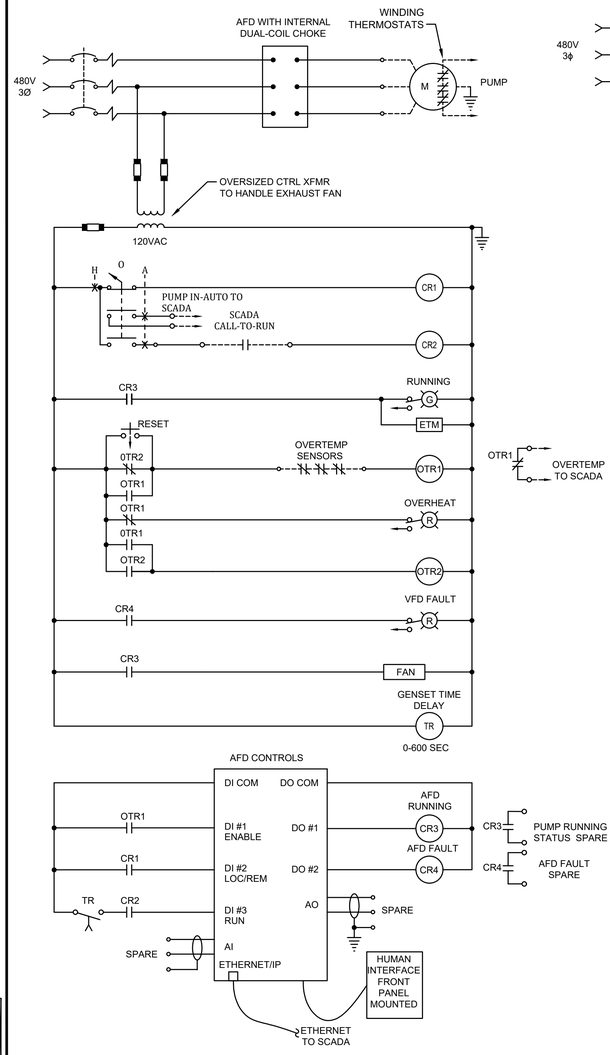

GAC FEED PUMP/GAC BACKWASH PUMP

- SOME WIRING IS NOT SHOWN. SEE PLANS, SPECIFICATIONS AND SCADA I/O TABLE FOR FURTHER REQUIREMENTS.
- SEE ONE-LINE DIAGRAM FOR PUMP HORSEPOWER.
- IN HAND MODE, DRIVE SHALL OPERATE FROM LOCAL INTERFACE. IN AUTO MODE, DRIVE SHALL BE CONTROLLED FROM SCADA

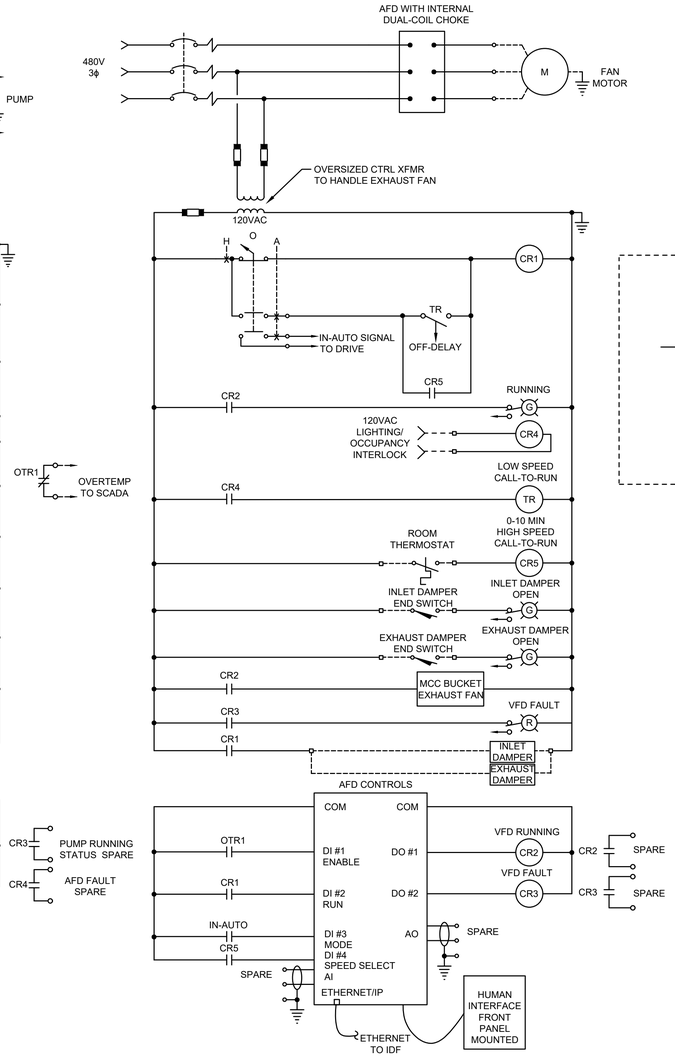

EXHAUST FAN CONTROL CIRCUIT, TYP.

NOT TO SCALE

- IN LOCAL MODE, MOTOR SHALL BE CONTROLLED FROM LOCAL FREQUENCY DRIVE DISPLAY. IN AUTO MODE, FLOCCULATOR SHALL BE CONTROLLED FROM TERMINALS.
- POWER OUTAGE FAULT SHALL RESET AUTOMATICALLY.
- SEE ONE-LINE DIAGRAM FOR SIZING AND QUANTITY
- LOW SPEED MODE SHALL BE TRIGGERED BY ROOM OCCUPANCY LIGHTS. COORDINATE WITH BALANCE CONTRACTOR TO ADJUST LOW SPEED H2
- HIGH SPEED MODE SHALL BE TRIGGERED BY THERMOSTAT AND SHALL OVERRIDE THE LOW SPEED MODE. HIGH SPEED SHALL BE 60HZ

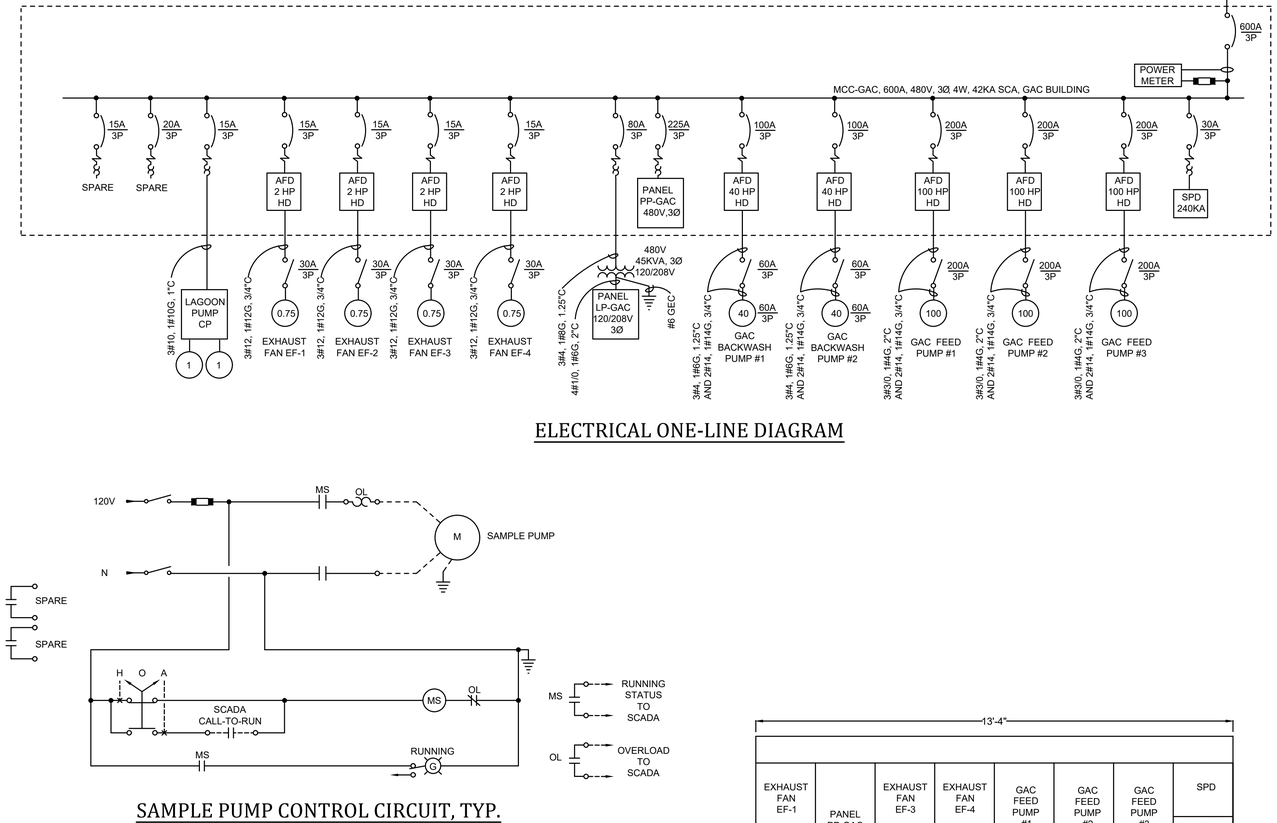

ELECTRICAL ONE-LINE DIAGRAM

SAMPLE PUMP CONTROL CIRCUIT, TYP.

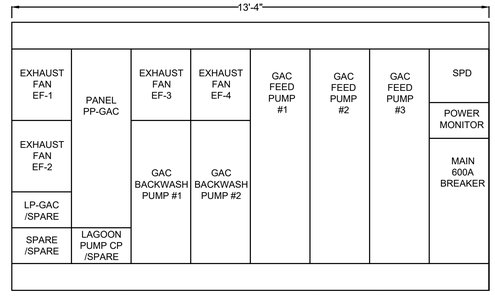

MCC-GAC ELEVATION

SCALE: 1/2" = 1'-0"

IT IS A VIOLATION OF LAW FOR ANY PERSON TO ALTER THIS DRAWING WITHOUT WRITTEN PERMISSION FROM KENTUCKY ENGINEERING GROUP, PLLC AND ACTING UNDER THE DIRECTION OF A LICENSED ENGINEER.

THIS DRAWING WAS PREPARED AT THE SCALE INDICATED. INACCURACIES IN THE STATED SCALE MAY BE INTRODUCED WHEN DRAWINGS ARE REPRODUCED BY ANY MEANS. USE THE GRAPHIC SCALE BAR IN THE DRAWING OR TITLE BLOCK TO DETERMINE THE ACTUAL SCALE.

NO.	DATE	REVISIONS	BY

DATE:	FEBRUARY 2026
PROJECT MGR:	RCC
DRAWN BY:	JAB
CHECKED BY:	RCC
SCALE:	

2026 © Kentucky Engineering Group, PLLC

P.O. Box 1034
VERSAILLES, KENTUCKY 40383
KENTUCKY ENGINEERING GROUP, PLLC

WATER TREATMENT PLANT
GAC FACILITY
FOR THE
CITY OF CYNTHIANA

ELECTRICAL CONTROL CIRCUITS AND ONE-LINE DIAGRAM

STATE OF KENTUCKY
BENJAMIN L. MURPHY
25348
LICENSED PROFESSIONAL ENGINEER
5/07/2026

PROJECT NO. 25009

SHEET NO. E-5

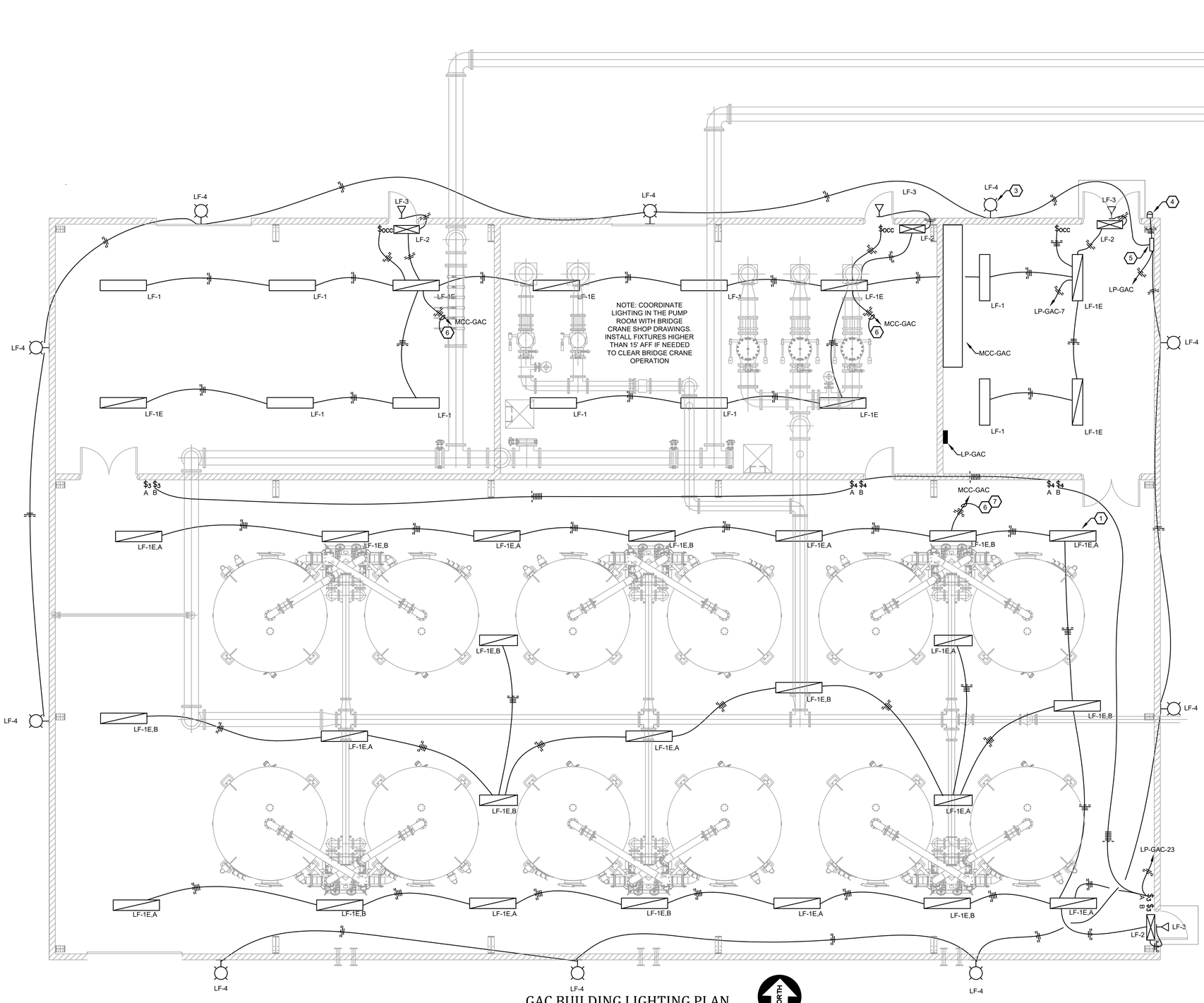

GAC BUILDING LIGHTING PLAN

SCALE: 3/16" = 1'-0"

NORTH

GENERAL SHEET NOTES:

- SWITCHES AND WIRING DEVICES SHALL BE FLUSH-MTD IN WALLS AND CONCRETE BLOCK

SHEET NOTES:

1. PROVIDE SS CHAIN AND SUSPEND FIXTURE TO 15' AFF, TYPICAL OF 39 FIXTURES
2. INSTALL FIXTURE AT 100" AFF, TYPICAL OF 4 FIXTURES
3. INSTALL FIXTURE AT 14' AFF, TYPICAL OF 10 FIXTURES
4. PROVIDE PHOTOCELL INSTALLED AT 14' AFF
5. PROVIDE LIGHTING CONTACTOR WITH HOA SWITCH. AUTO MODE SHALL BE CONTROLLED BY PHOTOCELL
6. PROVIDE LIGHTING CIRCUIT INTERLOCK TO MCC TO TURN ON FAN LOW SPEED MODE WHEN ROOM IS OCCUPIED
7. CONNECT FAN EF-3 TO LIGHTING CIRCUIT "A" AND EF-4 TO LIGHTING CIRCUIT "B"

IT IS A VIOLATION OF LAW FOR ANY PERSON TO ALTER THIS DRAWING WITHOUT WRITTEN PERMISSION FROM KENTUCKY ENGINEERING GROUP, PLLC AND ACTING UNDER THE DIRECTION OF A LICENSED ENGINEER.

THIS DRAWING WAS PREPARED AT THE SCALE INDICATED. INACCURACIES IN THE STATED SCALE MAY BE INTRODUCED WHEN DRAWINGS ARE REPRODUCED BY ANY MEANS. USE THE GRAPHIC SCALE BAR IN THE DRAWING OR TITLE BLOCK TO DETERMINE THE ACTUAL SCALE.

NO.	DATE	REVISIONS	BY

DATE:	FEBRUARY 2026
PROJECT MGR:	RCC
DRAWN BY:	JAB
CHECKED BY:	RCC
SCALE:	

2026 © Kentucky Engineering Group, PLLC

P.O. Box 1034
VERSAILLES, KENTUCKY 40383
KENTUCKY ENGINEERING GROUP, PLLC

WATER TREATMENT PLANT
GAC FACILITY
FOR THE
CITY OF CYNTHIANA

GAC BUILDING LIGHTING PLAN

COMMONWEALTH OF KENTUCKY
BENJAMIN L MURPHY
25348
LICENSED PROFESSIONAL ENGINEER

PROJECT NO.
25009

SHEET NO.
E-6

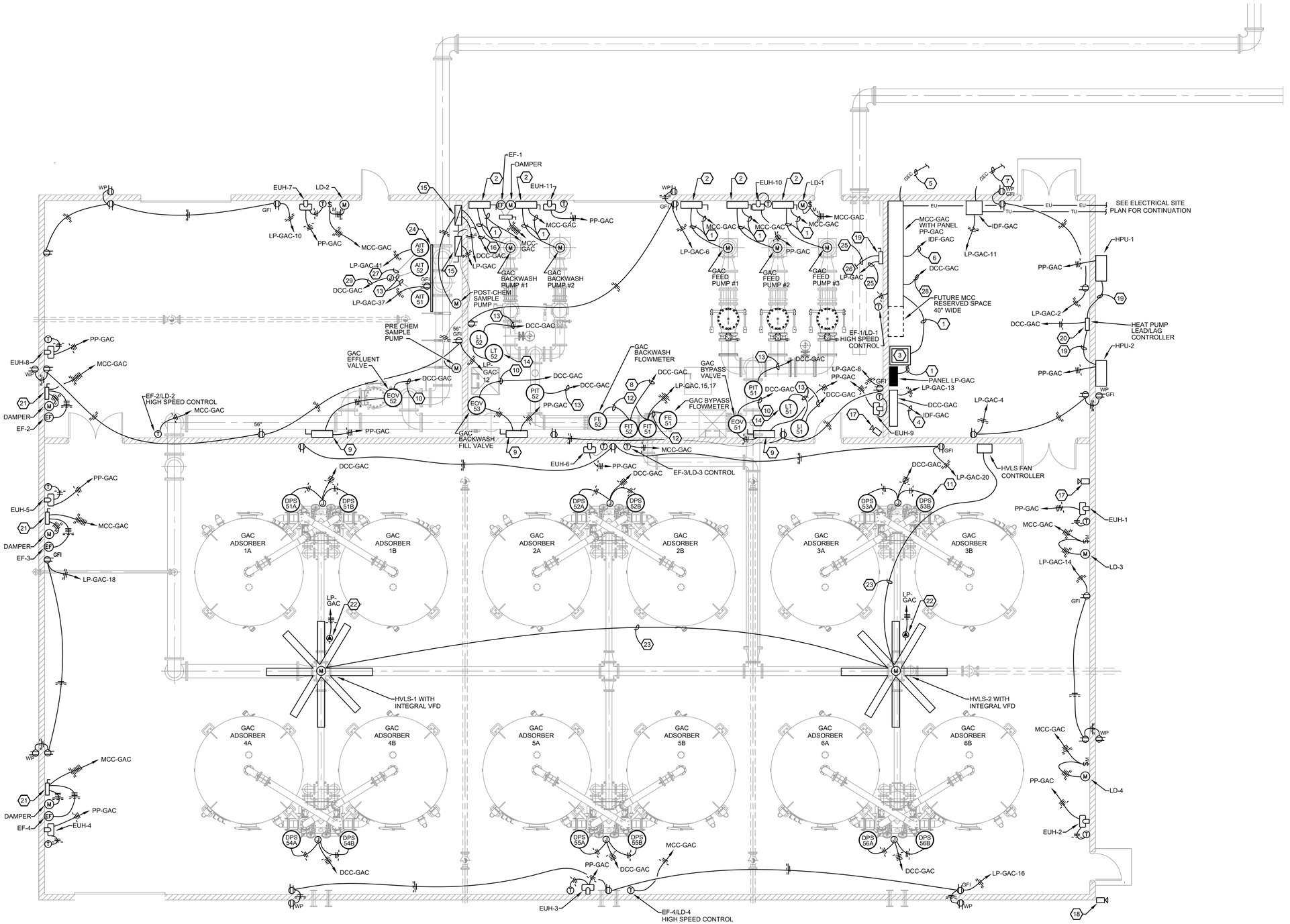

GAC BUILDING POWER PLAN

SCALE: 3/16" = 1'-0"

GENERAL SHEET NOTES:

- RECEPTACLES AND WIRING DEVICES SHALL BE FLUSH-MTD IN CONCRETE BLOCK WALLS WITH CONCEALED CONDUIT. OTHER EQUIPMENT AND CONDUIT MAY BE SURFACE-MTD
- ELECTRICAL ROOM EQUIPMENT MAY BE NEMA 1 PAINTED STEEL. ALL OTHER EQUIPMENT SHALL BE STAINLESS STEEL TYPE 316
- A LIGHTNING PROTECTION SYSTEM IS REQUIRED FOR THE BUILDING. SEE SECTION 16670 FOR REQUIREMENTS

SHEET NOTES:

1. SEE ONE-LINE DIAGRAM FOR CIRCUIT REQUIREMENTS
2. PROVIDE N4X SAFETY SWITCH SIZED PER ONE-LINE DIAGRAM. TWO AUXILIARY CONTACTS SHALL BE PROVIDED TO DISCONNECT MOTOR OVERTEMP WIRING
3. PROVIDE TRANSFORMER MTD ON 4" CONC PAD. SEE ONE-LINE DIAGRAM FOR REQUIREMENTS
4. PROVIDE 2-CAT6, 1"C
5. PROVIDE 2/0 GEC, 3/4" PVC AND PROVIDE GROUND LOOP PER BUILDING GROUND DETAIL
6. PROVIDE 10-CAT6, 2"C
7. PROVIDE #6 GEC, 3/4" PVC TO GROUND LOOP
8. PROVIDE 2-2#18 STIC, 1#14G, 3/4"C
9. PROVIDE 30A, 3P N4X SAFETY SWITCH
10. PROVIDE 8#18 STIC, 1#14G, 3/4"C
11. PROVIDE INSTRUMENT MOUNTING STAND AND INSTALL MFR-FURNISHED DIFFERENTIAL PRESSURE SWITCH. TYPICAL OF 12
12. INSTALL MFR-FURNISHED FLOWMETER PRIMARY CABLING, 1#14G, 3/4"C
13. PROVIDE 2#18 STIC, 1#14G, 3/4"C
14. PROVIDE RADAR TRANSDUCER INSTALLED PER RADAR INSTALLATION DETAIL
15. PROVIDE N4X COMBINATION STARTER, NEMA SIZE 1, SINGLE-PHASE. SEE CONTROL CIRCUIT
16. PROVIDE 12#14, 1#14G, 3/4"C
17. PROVIDE INTERIOR CAMERA WALL-MTD 100"AFF AND PROVIDE CAT6, 3/4"C TO IDF-GAC
18. PROVIDE EXTERIOR PTZ CAMERA CORNER-BRACKET MOUNTED 144"AFF AND PROVIDE CAT6, 3/4"C TO IDF-GAC
19. PROVIDE THERMOSTAT CABLE, 1#14G, 3/4"C
20. CONNECT ALARM CONTACTS IN PARALLEL TO CREATE A SINGLE SUMMARY ALARM SIGNAL
21. PROVIDE 30A, 3P N4X SAFETY SWITCH WITH TWO AUX CONTACTS TO DISCONNECT DAMPER MOTOR
22. PROVIDE 15A, 250V TWISTLOCK RECEPTACLE INSTALLED AT CEILING AND ALSO PROVIDE ASSOCIATED CORD AND PLUG TO CONNECT FAN
23. PROVIDE CAT-6, 3/4"C
24. PROVIDE 2-POST INSTRUMENTAL FLOOR STAND PER DETAIL
25. PROVIDE 3#10, 1#10G, 3/4"C
26. EXTEND CIRCUIT UP TO BRIDGE CRANE AND TERMINATE PER CRANE MFR INSTRUCTIONS
27. PROVIDE 2-8#18 STIC, 1#14G, 1"C
28. PROVIDE 32#14, 18#14 SPARE, 1#14G, 1.25"C
29. PROVIDE 2-8#18 STIC, 2-2#18 STIC, 1#14G, 1.25"C

IT IS A VIOLATION OF LAW FOR ANY PERSON TO ALTER THIS DRAWING WITHOUT WRITTEN PERMISSION FROM KENTUCKY ENGINEERING GROUP, PLLC AND ACTING UNDER THE DIRECTION OF A LICENSED ENGINEER.

THIS DRAWING WAS PREPARED AT THE SCALE INDICATED. INACCURACIES IN THE STATED SCALE MAY BE INTRODUCED WHEN DRAWINGS ARE REPRODUCED BY ANY MEANS. USE THE GRAPHIC SCALE BAR IN THE DRAWING OR TITLE BLOCK TO DETERMINE THE ACTUAL SCALE.

NO.	DATE	REVISIONS	BY

DATE:	FEBRUARY 2026
PROJECT MGR:	RCC
DRAWN BY:	JAB
CHECKED BY:	RCC
SCALE:	

2026 © Kentucky Engineering Group, PLLC

P.O. Box 1034
VERSAILLES, KENTUCKY 40383
KENTUCKY ENGINEERING GROUP, PLLC

WATER TREATMENT PLANT
GAC FACILITY
FOR THE
CITY OF CYNTHIANA

GAC BUILDING POWER PLAN

BENJAMIN L. MURPHY 25348 LICENSED PROFESSIONAL ENGINEER STATE OF KENTUCKY — 2/27/2026

PROJECT NO. 25009

SHEET NO. E-7

INSTRUMENTATION ABBREVIATIONS

AE	ANALYZER ELEMENT (SENSOR)
AI	ANALOG INPUT
AIT	ANALYZER INDICATOR & TRANSMITTER
AO	ANALOG OUTPUT
AOV	AIR OPERATED VALVE
CCC	CENTRAL CONTROL CABINET
DCC	DISTRIBUTED CONTROL CABINET
DI	DIGITAL INPUT
DO	DIGITAL OUTPUT
DP	DIFFERENTIAL PRESSURE
EOV	ELECTRICALLY OPERATED VALVE
FCV	FLOW CONTROLLED VALVE (MODULATING)
FE	FLOW ELEMENT (SENSOR)
FIT	FLOW INDICATOR & TRANSMITTER
FQIT	FLOW TOTALIZER, INDICATOR, TRANSMITTER
FV	FLOW VALVE (TWO-POSITION)
HV	HAND VALVE
IOC	INPUT-OUTPUT CABINET
LE	LEVEL ELEMENT (SENSOR)
LIT	LEVEL INDICATOR & TRANSMITTER
LS	LEVEL OR LIMIT SWITCH
LT	LEVEL TRANSMITTER
MTU	MASTER TELEMETRY UNIT
PE	PRESSURE ELEMENT (SENSOR)
PI	PULSE INPUT OR PRESSURE INDICATOR
PIT	PRESSURE INDICATOR & TRANSMITTER
PLC	PROGRAMMABLE LOGIC CONTROLLER
RTU	REMOTE TELEMETRY UNIT
TE	TEMPERATURE ELEMENT
TI	TEMPERATURE INDICATOR
TIT	TEMPERATURE INDICATOR & TRANSMITTER
WE	WEIGHT ELEMENT (SENSOR)
WIQT	WEIGHT INDICATOR, TOTALIZER, TRANSMITTER

INSTRUMENTATION SYMBOLS

XX YY	INSTRUMENT TAG
XXX	INSTRUMENT (SEE ABBREV. FOR TYPE)
	GATE VALVE
	BALL VALVE
F E	FIBER-TO-COPPER ETHERNET CONVERTER
	SLIDE OR SLUICE GATE
	FLUME
	CHECK VALVE
	BUTTERFLY VALVE - MANUALLY ACTUATED
FCV	BUTTERFLY VALVE - FLOW CONTROLLED
T	PLUG VALVE
E	AVERAGING PITOT TUBE
M	MAGMETER
V	TURBINE OR PROPELLER FLOW METER
	PUMP
LE XXX	ULTRASONIC LEVEL SENSOR

INSTRUMENTATION SCHEDULE

TAG	DESCRIPTION	TYPE	LOCATION	RANGE	UNIT	OUTPUT	POWER	SENSOR MOUNTING	TRANS. MOUNTING
AE/AIT-51	POST-GAC PRE-CHEM TURBIDITY	NEPHELOMETRIC	GAC SAMPLE RM	0-1	NTU	4-20MA	120VAC	WALLMOUNT	WALLMOUNT
AE/AIT-52	POST-GAC POST-CHEM CHLORINE	CHLORINE ANALYZER	GAC SAMPLE RM	0-10	mg/L	4-20MA	120VAC	WALLMOUNT	WALLMOUNT
AE/AIT-53	GAC TOC ANALYZER	TOC ANALYZER	GAC SAMPLE RM	0-25	mgC/L	4-20MA X 4 + DI/DO	120VAC	WALLMOUNT	INTEGRAL
FE/FIT-51	GAC BYPASS FLOW RATE	MAGMETER, 18"	GAC PUMP RM	0-6000	GPM	4-20MA	120VAC	IN-LINE FLANGED	WALLMOUNT
FE/FIT-52	GAC BACKWASH FLOW RATE	MAGMETER, 12"	GAC PUMP RM	0-3000	GPM	4-20MA	120VAC	IN-LINE FLANGED	WALLMOUNT
LT/LI 51	GAC FEED WETWELL LEVEL	RADAR	GAC PUMP RM	0-18	FT	4-20MA	LOOP	NPT	WALLMOUNT
LT/LI 52	GAC BACKWASH WETWELL LEVEL	RADAR	GAC PUMP RM	0-18	FT	4-20MA	LOOP	NPT	WALLMOUNT
PIT-51	GAC FEED PUMP DISCHARGE PRESSURE	PRESSURE CELL	GAC PUMP RM	0-100	PSIG	4-20MA	LOOP	NPT	INTEGRAL
PIT-52	GAC BACKWASH PUMP DISCHARGE PRESSURE	PRESSURE CELL	GAC PUMP RM	0-100	PSIG	4-20MA	LOOP	NPT	INTEGRAL

NOTE: GAC ADSORBER PRESSURE INSTRUMENTS FURNISHED BY GAC MFR ARE NOT INCLUDED IN THE TABLE

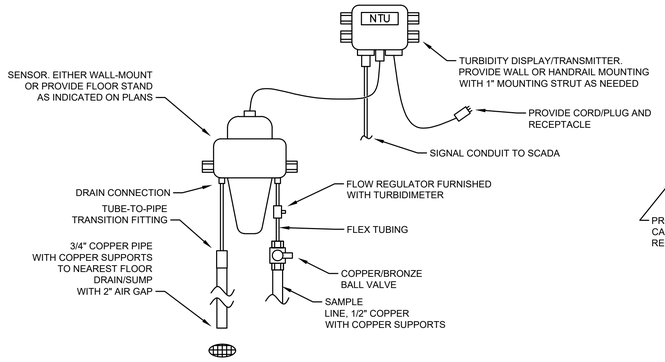

LOW RANGE TURBIDIMETER DETAIL

NOT TO SCALE

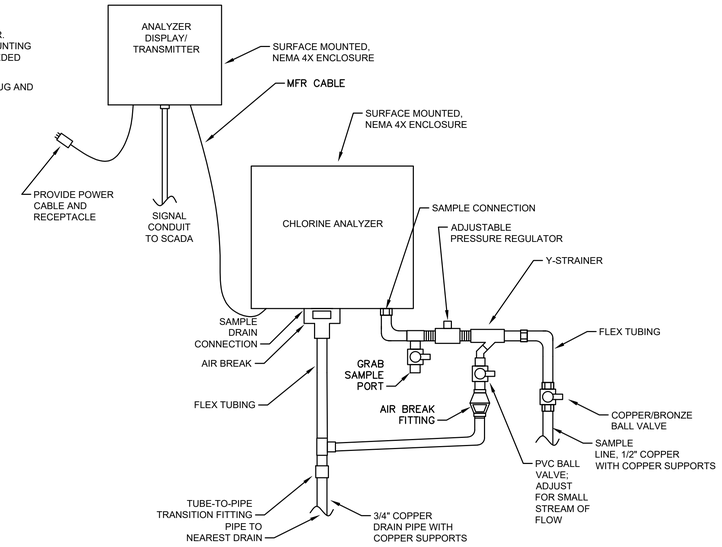

CHLORINE ANALYZER INSTALLATION DETAIL

N.T.S.

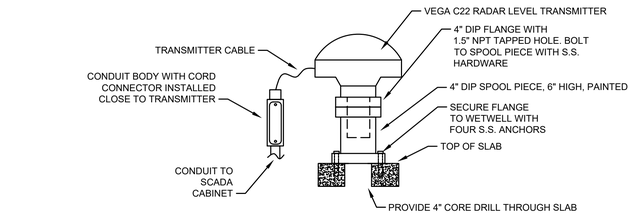

RADAR LEVEL TRANSDUCER INSTALLATION DETAIL

NOT TO SCALE

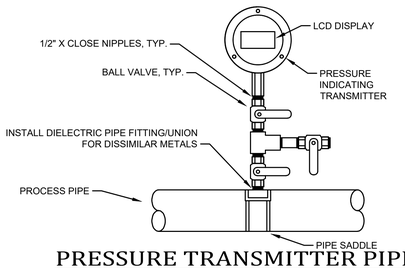

PRESSURE TRANSMITTER PIPING DETAIL

N.T.S.

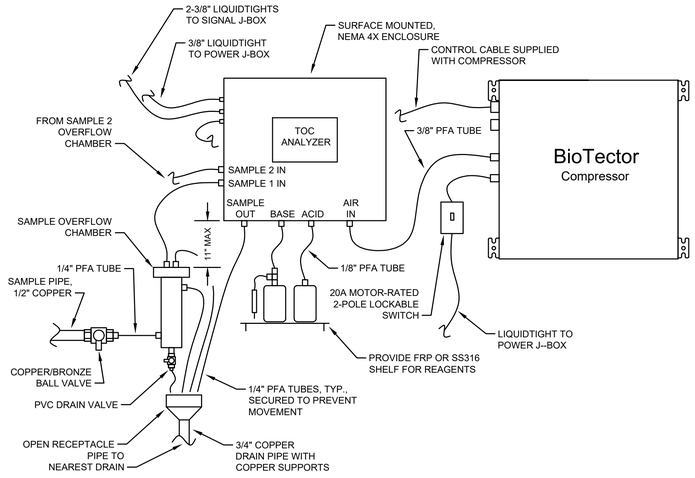

TOC ANALYZER INSTALLATION DETAIL

N.T.S.

NOTE: THE SAMPLE OVERFLOW ASSEMBLY IS REQUIRED FOR BOTH SAMPLE STREAMS

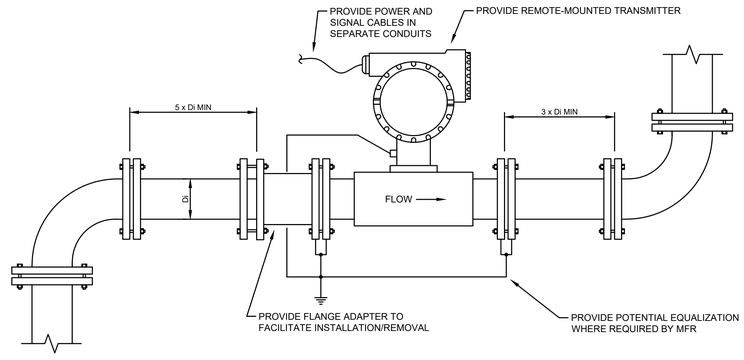

MAGMETER INSTALLATION DETAIL

N.T.S.

IT IS A VIOLATION OF LAW FOR ANY PERSON TO ALTER THIS DRAWING WITHOUT WRITTEN PERMISSION FROM KENTUCKY ENGINEERING GROUP, PLLC AND ACTING UNDER THE DIRECTION OF A LICENSED ENGINEER.

THIS DRAWING WAS PREPARED AT THE SCALE INDICATED. INACCURACIES IN THE STATED SCALE MAY BE INTRODUCED WHEN DRAWINGS ARE REPRODUCED BY ANY MEANS. USE THE GRAPHIC SCALE BAR IN THE DRAWING OR TITLE BLOCK TO DETERMINE THE ACTUAL SCALE.

NO.	DATE	REVISIONS	BY

DATE:	FEBRUARY 2026
PROJECT MGR:	RCC
DRAWN BY:	JAB
CHECKED BY:	RCC
SCALE:	

2026 © Kentucky Engineering Group, PLLC

P.O. Box 1034
VERSAILLES, KENTUCKY 40383
KENTUCKY ENGINEERING GROUP, PLLC

WATER TREATMENT PLANT
GAC FACILITY
FOR THE
CITY OF CYNTHIANA

INSTRUMENTATION SYMBOLS, ABBREVIATIONS, SCHEDULES, & DETAILS

COMMONWEALTH OF KENTUCKY
BENJAMIN L. MURPHY
25348
LICENSED PROFESSIONAL ENGINEER

PROJECT NO. 25009

SHEET NO. I-1

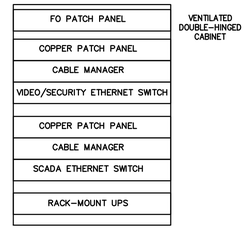

IDF-GAC DETAIL

NOT TO SCALE

SCADA & VIDEO NETWORK ARCHITECTURE

NOTE: VIDEO/SECURITY NETWORK SHALL BE ISOLATED FROM THE SCADA NETWORK. SEPARATE FIBERS SHALL BE USED WHERE A CABLE IS SHARED

IT IS A VIOLATION OF LAW FOR ANY PERSON TO ALTER THIS DRAWING WITHOUT WRITTEN PERMISSION FROM KENTUCKY ENGINEERING GROUP, PLLC AND ACTING UNDER THE DIRECTION OF A LICENSED ENGINEER.

THIS DRAWING WAS PREPARED AT THE SCALE INDICATED. INACCURACIES IN THE STATED SCALE MAY BE INTRODUCED WHEN DRAWINGS ARE REPRODUCED BY ANY MEANS. USE THE GRAPHIC SCALE BAR IN THE DRAWING OR TITLE BLOCK TO DETERMINE THE ACTUAL SCALE.

NO.	DATE	REVISIONS	BY

DATE:	FEBRUARY 2026
PROJECT MGR:	RCC
DRAWN BY:	JAB
CHECKED BY:	RCC
SCALE:	

2026 © Kentucky Engineering Group, PLLC

P.O. Box 1034
VERSAILLES, KENTUCKY 40383
KENTUCKY ENGINEERING GROUP, PLLC

WATER TREATMENT PLANT
GAC FACILITY
FOR THE
CITY OF CYNTHIANA

SCADA NETWORK ARCHITECTURE DIAGRAM

STATE OF KENTUCKY
BENJAMIN L. MURPHY
25348
LICENSED PROFESSIONAL ENGINEER
3/6/2026

PROJECT NO.
25009

SHEET NO.
I-2

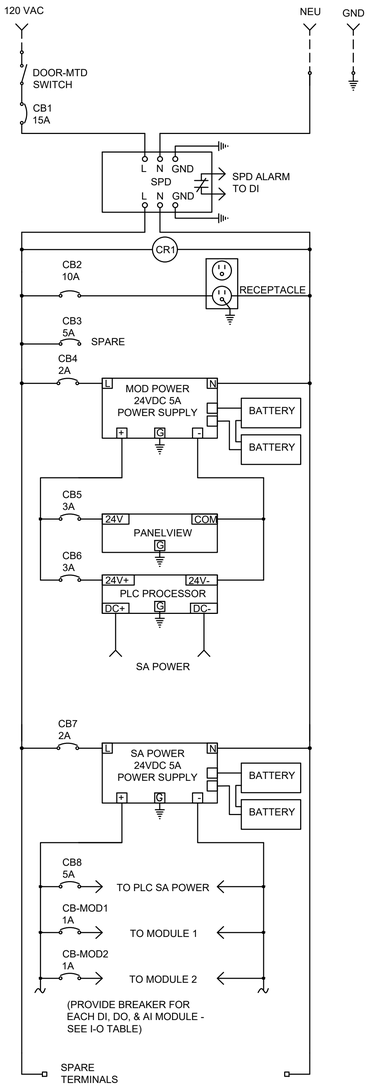

DCC-GAC POWER WIRING DIAGRAM

NOT TO SCALE

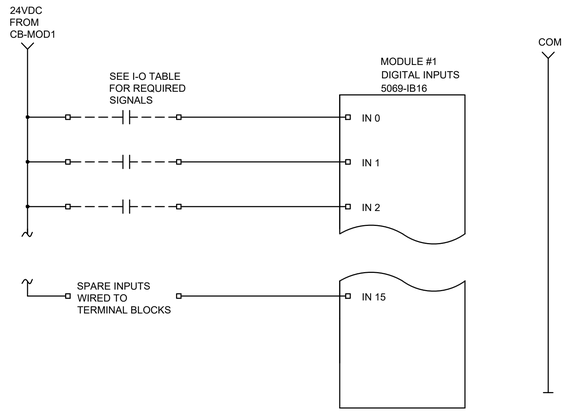

TYPICAL DI MODULE WIRING

NOT TO SCALE

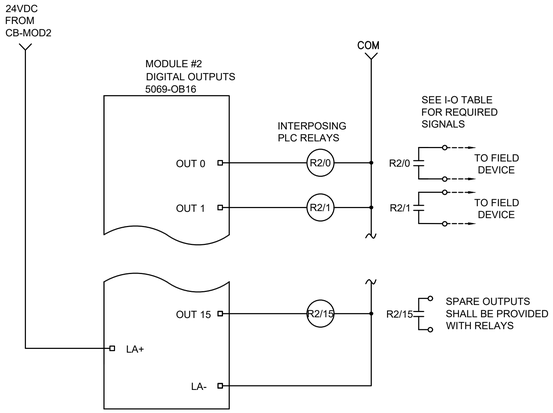

TYPICAL DO MODULE WIRING

NOT TO SCALE

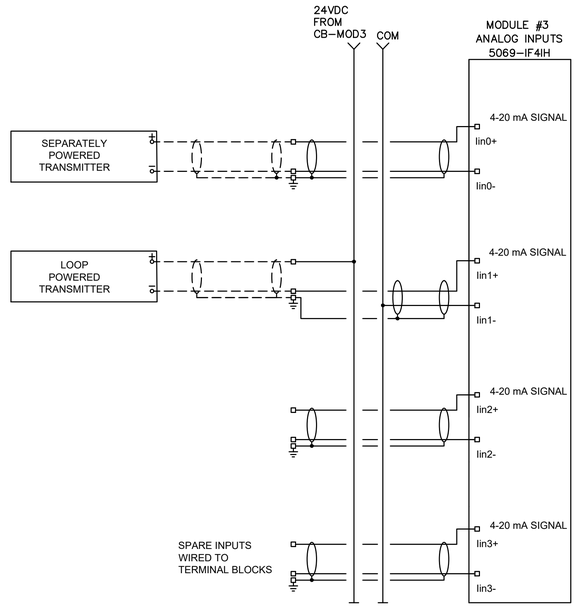

TYPICAL AI MODULE WIRING

NOT TO SCALE

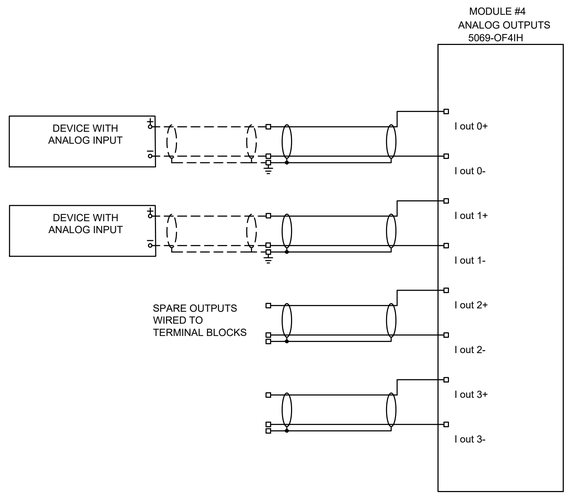

TYPICAL AO MODULE WIRING

NOT TO SCALE

SCADA PANEL DCC-GAC DIAGRAMS

NOT TO SCALE

- MODULE NUMBERING SHOWN HERE IS FOR EXAMPLE ONLY. SEE SCADA I/0 TABLE FOR I/O REQUIREMENTS AND TO DETERMINE QUANTITY OF MODULES REQUIRED
- SEE SECTION 16900 FOR CONSTRUCTION REQUIREMENTS

IT IS A VIOLATION OF LAW FOR ANY PERSON TO ALTER THIS DRAWING WITHOUT WRITTEN PERMISSION FROM KENTUCKY ENGINEERING GROUP, PLLC AND ACTING UNDER THE DIRECTION OF A LICENSED ENGINEER.

THIS DRAWING WAS PREPARED AT THE SCALE INDICATED. INACCURACIES IN THE STATED SCALE MAY BE INTRODUCED WHEN DRAWINGS ARE REPRODUCED BY ANY MEANS. USE THE GRAPHIC SCALE BAR IN THE DRAWING OR TITLE BLOCK TO DETERMINE THE ACTUAL SCALE.

NO.	DATE	REVISIONS	BY

DATE:	FEBRUARY 2026
PROJECT MGR:	RCC
DRAWN BY:	JAB
CHECKED BY:	RCC
SCALE:	

2026 © Kentucky Engineering Group, PLLC

P.O. Box 1034
VERSAILLES, KENTUCKY 40383
KENTUCKY ENGINEERING GROUP, PLLC

WATER TREATMENT PLANT
GAC FACILITY
FOR THE
CITY OF CYNTHIANA

SCADA PANEL DCC-GAC DIAGRAMS

STATE OF KENTUCKY
BENJAMIN L. MURPHY
25348
LICENSED PROFESSIONAL ENGINEER

PROJECT NO.
25009

SHEET NO.
I-3

LOCATION	CONDUCTORS	SPD REQ'D	TAG	I/O TAG	TYPE	UNIT	CONTROL	MONITOR	TREND	HISTORIZE	TOTALIZE	AVERAGE	ALARM	REPORT	SECURITY	NOTES
DCC-GAC	2#14			DCC POWER STATUS	DI								X			
	2#14			DCC BATTERY LOW	DI								X			
	2#14			DCC SPD ALARM	DI								X			
	2#14			MCC-GAC SPD ALARM	DI								X			
	ETHERNET			MCC-GAC PWR MONITOR AVG VOLTAGE	AI	VOLTS		X	X	X			X			ALARM LOW/HIGH
	ETHERNET			MCC-GAC PWR MONITOR AVG CURRENT	AI	AMPS		X	X	X						
	ETHERNET			MCC-GAC PWR MONITOR REAL POWER	AI	KW		X	X	X						
	ETHERNET			MCC-GAC PWR MONITOR APPARENT POWER	AI	KVA		X	X	X						
	ETHERNET			MCC-GAC PWR MONITOR POWER FACTOR	AI	PF		X	X	X						
	2#14			GAC FEED PUMP #1 IN-AUTO	DI			X								
	2#14			GAC FEED PUMP #1 OVERTEMP	DI								X			
	2#14			GAC FEED PUMP #1 CALL-TO-RUN	DO		X								OPERATOR	
	ETHERNET			GAC FEED PUMP #1 RUN STATUS	DI			X		X				X		REPORT # STARTS & RUNTIMES
	ETHERNET			GAC FEED PUMP #1 READY STATUS	DI			X								
	ETHERNET			GAC FEED PUMP #1 AFD FAULT	DI								X			
	ETHERNET			GAC FEED PUMP #1 SPEED COMMAND	AO	HZ	X								OPERATOR	
	ETHERNET			GAC FEED PUMP #1 SPEED FEEDBACK	AI	HZ		X	X	X						
	ETHERNET			GAC FEED PUMP #1 AMPS	AI	AMPS		X	X	X						
	2#14			GAC FEED PUMP #2 IN-AUTO	DI			X								
	2#14			GAC FEED PUMP #2 OVERTEMP	DI								X			
	2#14			GAC FEED PUMP #2 CALL-TO-RUN	DO		X								OPERATOR	
	ETHERNET			GAC FEED PUMP #2 RUN STATUS	DI			X		X				X		REPORT # STARTS & RUNTIMES
	ETHERNET			GAC FEED PUMP #2 READY STATUS	DI			X								
	ETHERNET			GAC FEED PUMP #2 AFD FAULT	DI								X			
	ETHERNET			GAC FEED PUMP #2 SPEED COMMAND	AO	HZ	X								OPERATOR	
	ETHERNET			GAC FEED PUMP #2 SPEED FEEDBACK	AI	HZ		X	X	X						
	ETHERNET			GAC FEED PUMP #2 AMPS	AI	AMPS		X	X	X						
	2#14			GAC FEED PUMP #3 IN-AUTO	DI			X								
	2#14			GAC FEED PUMP #3 OVERTEMP	DI								X			
	2#14			GAC FEED PUMP #3 CALL-TO-RUN	DO		X								OPERATOR	
	ETHERNET			GAC FEED PUMP #3 RUN STATUS	DI			X		X				X		REPORT # STARTS & RUNTIMES
	ETHERNET			GAC FEED PUMP #3 READY STATUS	DI			X								
	ETHERNET			GAC FEED PUMP #3 AFD FAULT	DI								X			
	ETHERNET			GAC FEED PUMP #3 SPEED COMMAND	AO	HZ	X								OPERATOR	
	ETHERNET			GAC FEED PUMP #3 SPEED FEEDBACK	AI	HZ		X	X	X						
	ETHERNET			GAC FEED PUMP #3 AMPS	AI	AMPS		X	X	X						
	2#14			GAC BACKWASH PUMP #1 IN-AUTO	DI			X								
	2#14			GAC BACKWASH PUMP #1 OVERTEMP	DI								X			
	2#14			GAC BACKWASH PUMP #1 CALL-TO-RUN	DO		X								OPERATOR	
	ETHERNET			GAC BACKWASH PUMP #1 RUN STATUS	DI			X		X				X		REPORT # STARTS & RUNTIMES
	ETHERNET			GAC BACKWASH PUMP #1 READY STATUS	DI			X								
	ETHERNET			GAC BACKWASH PUMP #1 AFD FAULT	DI								X			
	ETHERNET			GAC BACKWASH PUMP #1 SPEED COMMAND	AO	HZ	X								OPERATOR	
	ETHERNET			GAC BACKWASH PUMP #1 SPEED FEEDBACK	AI	HZ		X	X	X						
	ETHERNET			GAC BACKWASH PUMP #1 AMPS	AI	AMPS		X	X	X						
	2#14			GAC BACKWASH PUMP #2 IN-AUTO	DI			X								
	2#14			GAC BACKWASH PUMP #2 OVERTEMP	DI								X			
	2#14			GAC BACKWASH PUMP #2 CALL-TO-RUN	DO		X								OPERATOR	
	ETHERNET			GAC BACKWASH PUMP #2 RUN STATUS	DI			X		X				X		REPORT # STARTS & RUNTIMES
	ETHERNET			GAC BACKWASH PUMP #2 READY STATUS	DI			X								
	ETHERNET			GAC BACKWASH PUMP #2 AFD FAULT	DI								X			
	ETHERNET			GAC BACKWASH PUMP #2 SPEED COMMAND	AO	HZ	X								OPERATOR	
	ETHERNET			GAC BACKWASH PUMP #2 SPEED FEEDBACK	AI	HZ		X	X	X						
	ETHERNET			GAC BACKWASH PUMP #2 AMPS	AI	AMPS		X	X	X						
	2#18 STIC	X	AIT-51	POST-GAC PRE-CHEM TURBIDITY	AI	NTU		X	X	X			X			ALARM HIGH
	2#18 STIC	X	AIT-52	POST-GAC POST-CHEM CHLORINE	AI	MG/L		X	X	X			X			ALARM LOW/HIGH
	2#18 STIC	X	AIT-53	TOC ANALYZER: PRE-GAC TOC	AI	mgC/L		X	X	X				X		REPORT 30-MIN DATA LOG
	2#18 STIC	X	AIT-53	TOC ANALYZER: POST-GAC TOC	AI	mgC/L		X	X	X			X	X		ALARM LOW/HIGH; REPORT 30-MIN DATA LOG
	2#18 STIC	X	AIT-53	TOC ANALYZER: % REMOVAL	AI	%		X	X	X			X	X		ALARM LOW; REPORT 30-MIN DATA LOG
	2#18 STIC		AIT-53	TOC ANALYZER REMOTE STANDBY CMD	DO		X									DISABLE ANALYSIS WHEN PLANT IS NOT RUNNING
	2#18 STIC		AIT-53	TOC ANALYZER FAULT	DI								X			
	2#18 STIC		AIT-53	TOC ANALYZER WARNING	DI								X			

LOCATION	CONDUCTORS	SPD REQ'D	TAG	I/O TAG	TYPE	UNIT	CONTROL	MONITOR	TREND	HISTORIZE	TOTALIZE	AVERAGE	ALARM	REPORT	SECURITY	NOTES
DCC-GAC	2#18 STIC	X	FIT-51	GAC BYPASS FLOW RATE	AI	GPM		X	X	X	X		X			REPORT DAILY & MONTHLY FLOW TOTALS
CONTINUED	2#18 STIC	X	FIT-52	GAC BACKWASH FLOW METER	AI	GPM		X	X	X	X			X		REPORT DAILY & MONTHLY FLOW TOTALS
	CALC			GAC FEED FLOW	CALC	GPM		X	X	X	X			X		FILTER FLOW MINUS GAC BYPASS FLOW
	2#18 STIC	X	LT-51	GAC FEED WETWELL LEVEL	AI	FT		X	X	X			X			ALARM LOW/HIGH
	2#18 STIC	X	LT-52	GAC BACKWASH WETWELL LEVEL	AI	FT		X	X	X			X			
	2#18 STIC	X	PIT-51	GAC FEED PUMP DISCHARGE PRESSURE	AI	PSI		X	X	X			X			ALARM LOW/HIGH WHILE PUMP IS RUNNING
	2#18 STIC	X	PIT-52	GAC BACKWASH PUMP DISCHARGE PRESSURE	AI	PSI		X	X	X			X			ALARM LOW/HIGH WHILE PUMP IS RUNNING
	2#18 STIC	X	EOV-51	GAC BYPASS VALVE POSITION COMMAND	AO	%	X								OPERATOR	
	2#18 STIC	X	EOV-51	GAC BYPASS VALVE POSITION FEEDBACK	AI	%		X	X	X			X			ALARM POSITION DEVIATION
	2#18 STIC		EOV-51	GAC BYPASS VALVE READY/FAULT	DI		X						X			
	2#18 STIC	X	EOV-52	GAC EFFLUENT VALVE POSITION COMMAND	AO	%	X								OPERATOR	
	2#18 STIC	X	EOV-52	GAC EFFLUENT VALVE POSITION FEEDBACK	AI	%		X	X	X			X			ALARM POSITION DEVIATION
	2#18 STIC		EOV-52	GAC EFFLUENT VALVE READY/FAULT	DI		X						X			
	2#18 STIC	X	EOV-53	GAC BACKWASH FILL VALVE POSITION COMMAND	AO	%	X								OPERATOR	
	2#18 STIC	X	EOV-53	GAC BACKWASH FILL VALVE POSITION FEEDBACK	AI	%		X	X	X			X			ALARM POSITION DEVIATION
	2#18 STIC		EOV-53	GAC BACKWASH FILL VALVE READY/FAULT	DI		X						X			
	2#14		DPS-51A	GAC ADSORBER 51A PRESSURE DROP ALARM	DI			X					X			
	2#14		DPS-51B	GAC ADSORBER 51B PRESSURE DROP ALARM	DI			X					X			
	2#14		DPS-52A	GAC ADSORBER 52A PRESSURE DROP ALARM	DI			X					X			
	2#14		DPS-52B	GAC ADSORBER 52B PRESSURE DROP ALARM	DI			X					X			
	2#14		DPS-53A	GAC ADSORBER 53A PRESSURE DROP ALARM	DI			X					X			
	2#14		DPS-53B	GAC ADSORBER 53B PRESSURE DROP ALARM	DI			X					X			
	2#14		DPS-54A	GAC ADSORBER 54A PRESSURE DROP ALARM	DI			X					X			
	2#14		DPS-54B	GAC ADSORBER 54B PRESSURE DROP ALARM	DI			X					X			
	2#14		DPS-55A	GAC ADSORBER 55A PRESSURE DROP ALARM	DI			X					X			
	2#14		DPS-55B	GAC ADSORBER 55B PRESSURE DROP ALARM	DI			X					X			
	2#14		DPS-56A	GAC ADSORBER 56A PRESSURE DROP ALARM	DI			X					X			
	2#14		DPS-56B	GAC ADSORBER 56B PRESSURE DROP ALARM	DI			X					X			
	2#14			PRE-CHEM SAMPLE PUMP CALL-TO-RUN	DO		X								OPERATOR	
	2#14			PRE-CHEM SAMPLE PUMP RUN STATUS	DI			X		X				X		REPORT # STARTS & RUNTIMES
	2#14			PRE-CHEM SAMPLE PUMP OVERLOAD	DI								X			
	2#14			POST-CHEM SAMPLE PUMP CALL-TO-RUN	DO		X								OPERATOR	
	2#14			POST-CHEM SAMPLE PUMP RUN STATUS	DI			X		X				X		REPORT # STARTS & RUNTIMES
	2#14			POST-CHEM SAMPLE PUMP OVERLOAD	DI								X			
	ETHERNET			EF1 FAN RUN STATUS	DI			X								
	ETHERNET			EF1 FAN READY STATUS	DI			X								
	ETHERNET			EF1 FAN VFD FAULT	DI								X			
	ETHERNET			EF1 FAN SPEED FEEDBACK	AI	HZ		X	X	X						
	ETHERNET			EF1 FAN AMPS	AI	AMPS		X	X	X						
	ETHERNET			EF2 FAN RUN STATUS	DI			X								
	ETHERNET			EF2 FAN READY STATUS	DI			X								
	ETHERNET			EF2 FAN VFD FAULT	DI								X			
	ETHERNET			EF2 FAN SPEED FEEDBACK	AI	HZ		X	X	X						
	ETHERNET			EF2 FAN AMPS	AI	AMPS		X	X	X						
	ETHERNET			EF3 FAN RUN STATUS	DI			X								
	ETHERNET			EF3 FAN READY STATUS	DI			X								
	ETHERNET			EF3 FAN VFD FAULT	DI								X			
	ETHERNET			EF3 FAN SPEED FEEDBACK	AI	HZ		X	X	X						
	ETHERNET			EF3 FAN AMPS	AI	AMPS		X	X	X						
	ETHERNET			EF4 FAN RUN STATUS	DI			X								
	ETHERNET			EF4 FAN READY STATUS	DI			X								
	ETHERNET			EF4 FAN VFD FAULT	DI								X			
	ETHERNET			EF4 FAN SPEED FEEDBACK	AI	HZ		X	X	X						
	ETHERNET			EF4 FAN AMPS	AI	AMPS		X	X	X						
	2#14			GAC HEAT PUMP SUMMARY ALARM	DI								X			
	2#14	X		LAGOON PUMP CP HIGH LEVEL ALARM	DI								X			
	2#14	X		GENSET RUN STATUS	DI			X		X				X		REPORT #STARTS & RUNTIMES
	2#14	X		GENSET READY STATUS	DI			X								
	2#14	X		GENSET SUMMARY ALARM	DI								X			
	2#14	X		GENSET LOW FUEL ALARM	DI								X			

IT IS A VIOLATION OF LAW FOR ANY PERSON TO ALTER THIS DRAWING WITHOUT WRITTEN PERMISSION FROM KENTUCKY ENGINEERING GROUP, PLLC AND ACTING UNDER THE DIRECTION OF A LICENSED ENGINEER.

THIS DRAWING WAS PREPARED AT THE SCALE INDICATED. INACCURACIES IN THE STATED SCALE MAY BE INTRODUCED WHEN DRAWINGS ARE REPRODUCED BY ANY MEANS. USE THE GRAPHIC SCALE BAR IN THE DRAWING OR TITLE BLOCK TO DETERMINE THE ACTUAL SCALE.

NO.	DATE	REVISIONS	BY

DATE:	FEBRUARY 2026
PROJECT MGR:	RCC
DRAWN BY:	JAB
CHECKED BY:	RCC
SCALE:	

2026 © Kentucky Engineering Group, PLLC

P.O. Box 1034
VERSAILLES, KENTUCKY 40383
KENTUCKY ENGINEERING GROUP, PLLC

WATER TREATMENT PLANT
GAC FACILITY
FOR THE
CITY OF CYNTHIANA

SCADA I-O TABLE

STATE OF KENTUCKY
BENJAMIN L. MURPHY
25348
LICENSED PROFESSIONAL ENGINEER
3/27/2026

PROJECT NO.
25009

SHEET NO.
I-4